Research Summary

Developing a Prototype for the Rapid Demountable Platform (RDP)

Stage II of CII-HK Research on "Construction Safety Involving Working at Height for Residential Building Repair and Maintenance"

Construction Industry Institute
HONG KONG

Research Team

Co- Principal Investigators

Ir Prof Albert P C CHAN
Prof Francis K W WONG

Co- Investigators

Dr Daniel W M CHAN
Miss Esther CHEUNG
Dr Esther W K CHOY
Miss Tracy S K CHUNG
Ir Albert W K KWOK
Dr Edmond W M LAM
Mr W C LEE
Dr C H LIU
Mr Paul C H LO
Prof Michael K W SIU
Mr Pete C W WONG
Dr Michael C H YAM

Research Summary

Developing a Prototype for the Rapid Demountable Platform (RDP)

Stage II of CII-HK Research on "Construction Safety Involving Working at Height for Residential Building Repair and Maintenance"

Construction Industry Institute
HONG KONG

Construction Industry Institute
HONG KONG

CII-HK Research Report No.14

ISBN 1978-988-99558-7-8

April 2009

Bamboo scaffolding, usually with a wrap-around red, white and blue plastic screen outside the windows of both new and old multi-storey buildings is a common sight in Hong Kong. They are there for repair of windows, drainpipes, installation of air-conditioners and so forth, the descriptive industry term for this is a "bamboo truss-out scaffold".

Regrettably from time to time workers fall to their death from these flimsy platforms. Patient research by CII-HK team has resulted in the design of an easily assembled, safe metal "truss-out", an alternative or supplement to the bamboo scaffold and which can be of value not only in Hong Kong but anywhere in situations where access to the outside of buildings is out of reach of ladders.

I am proud to acknowledge here the ingenuity of all members of the Research Team and their Advisors and only hope some generous philanthropist with the interests of the workers at heart will invest and produce these cheap, safe and easily assembled substitutes for general use.

Sir David Akers-Jones
Chairman
Construction Industry Institute - Hong Kong

Visitors to Hong Kong often marvel at the beautiful skyline that borders our harbor. Internationally-renowned towers and other structures enhance the aesthetics and the quality of life in this vibrant city. Behind the impressive silhouette, which was enabled by advances in construction methods, there are many stories of unsung heroes.

The construction workers of Hong Kong have contributed their creativity and extraordinary abilities to build our city into what it is today. Thanks to initiatives from the HKSAR Government, the professional institutions, our universities, the Construction Industry Institute - Hong Kong and many parties dedicated to site safety, site safety in construction sites is being reviewed and new measures are being taken proactively to enhance and update site safety guidelines.

Hong Kong will continue to embark on major infrastructure projects and the building industry will endeavour to successfully resolve new challenges. Stakeholders at all levels should be mindful that site safety should be a top priority and that lives can be saved by using more up-to-date methods. Improvements in safety records will depend on self discipline at all levels, from lawmakers and the heads of industry to subcontractors and the workers themselves. For marked improvements, a joint commitment by all interested parties to work together on safety must be a priority in order to meet the time and cost challenges of the construction industry in Hong Kong. Construction methods need to be continuously reviewed to ensure that the motto "Safety First" yields even better results in the future!

Mr Thomas PK Kwok
Chairman of Committee on Construction Site Safety - Construction Industry Council

The Rapid Demountable Platform (RDP) is an applicable invention targeted at resolving a chronic safety problem involving working at height outside high-rise buildings. It is the brainchild of an intimate collaboration between academics and practitioners and it is the first industrial product patented by the Construction Industry Institute - Hong Kong (CII-HK) and the Hong Kong Polytechnic University (PolyU).

The conception and development of the RDP drew together experts from the structural engineering, manufacturing and product design disciplines in collaboration with construction professionals and frontline workers. RDP-II in its present form is the refinement of an earlier version in terms of loading, aesthetics, material durability and modularity. RDP-I was in essence a by-product of an earlier CII-HK research on *Construction Safety Involving Working at Height for Residential Building Repair and Maintenance* resulting from an urgent need of the industry at the time for a practical solution to enhance workman safety and to combat the rising rate of fatalities involving working at heights.

CII-HK acknowledges the valuable input rendered by construction practitioners from all walks of the industry as well as the ingenuity of the academia from different departments of the PolyU. The conferment of acclaimed international invention awards and honours is without doubt a rightful recognition of their tireless efforts and selfless contribution to make Hong Kong a safer place to work. Though the RDP can in no way claim to be a safety panacea for all conditions and circumstances involving working at height, yet with continued improvement and fully-tested modifications, it shall surely find extensive application in construction and particularly repair and maintenance works.

The Executive Board
Construction Industry Institute - Hong Kong

Construction Industry Institute
HONG KONG

Abbreviations

CII-HK: Construction Industry Institute – Hong Kong

CWRS: Construction Workers Registration System

HOKLAS: The Hong Kong Laboratory Accreditation Scheme

OSHC: Occupational Safety and Health Council

PolyU: The Hong Kong Polytechnic University

RDP: Rapid Demountable Platform

RDP-I: Rapid Demountable Platform Prototype I

RDP-II: Rapid Demountable Platform Prototype II

RPE: Registered Professional Engineer

TTAD: Transportable Temporary Anchorage Devices

Executive Summary

Prevention of fall from height accidents has long been a hot topic in the field of construction safety. Previous research has indicated that one of the potential hazards was induced from the use of steel bracket as scaffold support. While researchers are focusing to improve the existing scaffolding system, this research introduces a newly developed device to minimise fall accidents. The working platform, namely Rapid Demountable Platform (RDP) is applicable over the window frame without fixing by anchor bolts. Emphasising on the rapid installation/dismantling, RDP provides another safer option for working at height. The development of Rapid Demountable Platform Prototype I (RDP-I) has given an insight for the industry and practitioners urging for further improvement. Focusing on the fabrication materials and the application flexibility, a more advanced Rapid Demountable Platform Prototype II (RDP-II) has been produced. The input of modular concept and aesthetic factor has been incorporated in the design aspect, achieving a more user-friendly platform.

The aim of this project was to refine the RDP-I based on sound engineering design, user friendliness concepts and aesthetics. The process of refinement has undergone several stages. The generation of ideas was firstly inspired through comments from practitioners, research task force members and in-house research team members. Consolidated suggestions were deliberated by the Research Team members which were composed of designers, structural engineers, production engineers and project engineers. Liaison between designers and engineers went on whenever technical difficulties encountered. Finally, the feasibility of usage in actual working environment was examined under relevant testing.

The production of the RDP-II is the joint efforts of three separate and yet closely related teams, namely Design Team, Structural (Design) Testing Team and Implementation Team. There are several differences between RDP-I and II. Firstly, the standing panels for RDP-II were made of aluminum alloy panels with sinkholes instead of hardwood. The U-Frame utilised 50×30×3mm steel RHS and the triangular frame utilised 25×25×2.5mm steel SHS of Grade S355 steel, instead of 40×40×3mm SHS of Grade 43 steel. The railings in RDP-II were made of stainless steel pipes rather than galvanised iron pipes. The toe-boards utilised aluminum sheets rather than hardwood. In RDP-II a modular concept was incorporated for the standing panels and railings in unit dimensions. Product semantics was also applied to the toe-boards and base support in yellow stripes. The standing boards changed from 3 rectangular planks in longitudinal direction in the RDP-I , to 3 square sheets in transverse direction in RDP-II. The interlocking system adopted a pair of C-ring with screw attached rather than fixing by pins. The overall weight for RDP-II is 81kg and it can be installed within 10 minutes. These represent improvements of a weight reduction by 15% and a shortened installation time by 33%.

The RDP is not intended to totally replace the traditional bamboo truss-out scaffold. Instead the RDP is designed to act as an alternative or a supplement to the bamboo truss-out scaffold. It is hoped that the RDP could help to minimise fall from height accidents especially in cities similar to Hong Kong where external working at height is frequently encountered.

The RDP won a couple of invention awards in the 36th International Exhibition of Inventions, New Techniques and Products held in Geneva, Switzerland on 2-6 April 2008. It won a Gold Medal with the Special Commendation of the Jury and a National Authority for Scientific Research Award of the Romania Ministry of Education, Research and Youth for the High Scientific and Technological Level of the Invention. The RDP won another prestigious international award, the Innovation Achievers Award, from the Chartered Institute of Building (CIOB), UK in 2009. The aim of the award is to encourage the sharing of innovative ideas and practices, which can provide real benefits to members and other practitioners operating within the construction industry. Congratulations to the PolyU research team headed by Prof Albert Chan and Prof Francis Wong for this excellent and award-winning invention.

Contents

P.9

P.15

P.19

Introduction

1. Introduction

1.1 Accidents Caused by the Bamboo Truss-out Scaffold

The ageing of buildings in Hong Kong has become an alarming concern for the government and the general public recently. In order to manage the residential buildings in good condition, there is an increasing demand on repair and proper maintenance of existing housing stocks. The Hong Kong's construction industry has shown significant improvement in safety performance recently. The number of industrial accidents in the construction industry has decreased from 11,925 in 2000 to 3,499 in 2006, which is an encouraging drop over 70%. However, fall of person from height has always represented a large proportion of the fatal accidents. In 2004, fall of person from height represented half of the total number of fatal accidents in the construction industry (OSHC, 2007). In Hong Kong, residential building repair and maintenance works very much rely on the bamboo truss-out scaffold supported by steel brackets.

Due to height and the existing conditions of the high-rise buildings, external wall repair and maintenance works are extremely difficult. For example, it would be impractical to use scaffolding towers or equivalent devices which need to be erected from the ground, to reach a flat say on the 28th floor, for a small job such as changing an air conditioner. However, a lot of fall from height accidents are related to the use of the bamboo truss-out scaffold/bamboo scaffold as shown in Table 1. Ten fatal falls resulted in past 3 years (Labour Department, 2008).

"The number of industrial accidents in the construction industry has decreased from 11,925 in 2000 to 3,499 in 2006, which is an encouraging drop over 70%. However, fall of person from height represented half of the number of fatal accidents in the construction industry."

Table 1 Summary of recent fall from height accidents related to the use of the bamboo truss-out scaffold

Case No.	Year	Accident Summary	Source
1	2005	A worker was carrying out maintenance work to the external wall of a building at 7th floor. He climbed on to the bamboo scaffold outside not wearing a safety belt. When climbing to the bamboo scaffold, he slipped and fell to death.	Ming Pao Newspaper (2005)
2	2005	Two men had not been wearing safety belts while working outside the window of a fifth-floor unit in an industrial building. After the truss-out scaffolding they were working on collapsed, they died.	Oriental Daily Newspaper (2005)
3	2006	A bamboo scaffold with eight workers collapsed. One of the workers fell to the ground floor and died. Three of the workers fell to the 3rd floor. And the remaining four workers escaped by themselves.	Apple Daily Newspaper (2006)
4	2007	A worker was painting the window frame of a house whilst he fell 5m to his death. It was suspected that the worker may not have been wearing a safety belt.	Sing Tao Newspaper (2007)

Figure 1: The current bamboo truss-out scaffold used in Hong Kong

Figure 2: Close up of the current bamboo truss-out scaffold used in Hong Kong

1.2 Problems with the Bamboo Truss-out Scaffold

The current practice for doing external maintenance work in Hong Kong is to erect a temporary platform by way of a bamboo truss-out scaffold supported by steel brackets. However, the practice appears to be highly unreliable and a number of fatal accidents have occurred. Between 2000 and 2004, there were 4 fatal fall accidents in repair and maintenance works amongst 22 fatal cases that involved the use of bamboo truss-out scaffold (CII-HK, 2007). The number of fatal accidents associated with the bamboo truss-out scaffold has shown that this practice is highly unreliable. Problems identified in this system include:

- **No standards for the steel bracket;**
- **Quality of workers' self-made brackets unpredictable;**
- **Unpredictable condition of external walls;**
- **Third anchor bolt of steel brackets difficult to secure;**
- **Cheap anchor bolts of low quality are often used;**
- **Workers often work without wearing proper safety equipment; and**
- **The construction of truss-out scaffolding is tedious, accidents often during the installation and dismantling instead of whilst it is being used.**

Figure 3: Steel bracket

Figure 4: Anchor bolt

Figure 5: Wall damage

Figure 6: Hole caused by anchor bolt

Figure 7: Scaffold worker in action

"Between 2000 and 2004, there were 4 fatal fall accidents in repair and maintenance works amongst 22 fatal cases that involved the use of bamboo truss-out scaffold (CII-HK, 2007)."

1.3 Aims and Objectives of the Study

The RDP-I was developed in a previous project looking at fall from height accidents in repair and maintenance works. The findings from this project showed that there was a desperate need to design/provide an alternative/supplement to the current common agent for working at height, the bamboo truss-out scaffold. The development of the RDP-I aimed to reduce fall from height accidents especially during repair and maintenance works. The aim of this study is to develop the RDP-II based on the initial RDP-I . The new version will solve the limitations and disadvantages of the first version to ensure that it is a safe, reliable and user-friendly product. It is hoped that the RDP-II will be an alternative or a supplement to the traditional bamboo truss-out scaffold. The objectives include:

- **To refine the RDP-I ;**
- **To develop RDP-II using alternative materials to RDP-I ;**
- **To analyse whether the prototypes are durable and safe to be used for external building inspection, repair and maintenance works;**
- **To investigate the acceptability and practicability of the prototypes by various parties; and**
- **To suggest the most suitable design for the final prototype.**

Figure 8: Human safety harness?
(Source: Anonymous)

"The findings from this project showed that there was a desperate need to design/provide an alternative/supplement to the current common agent for working at height, the bamboo truss-out scaffold."

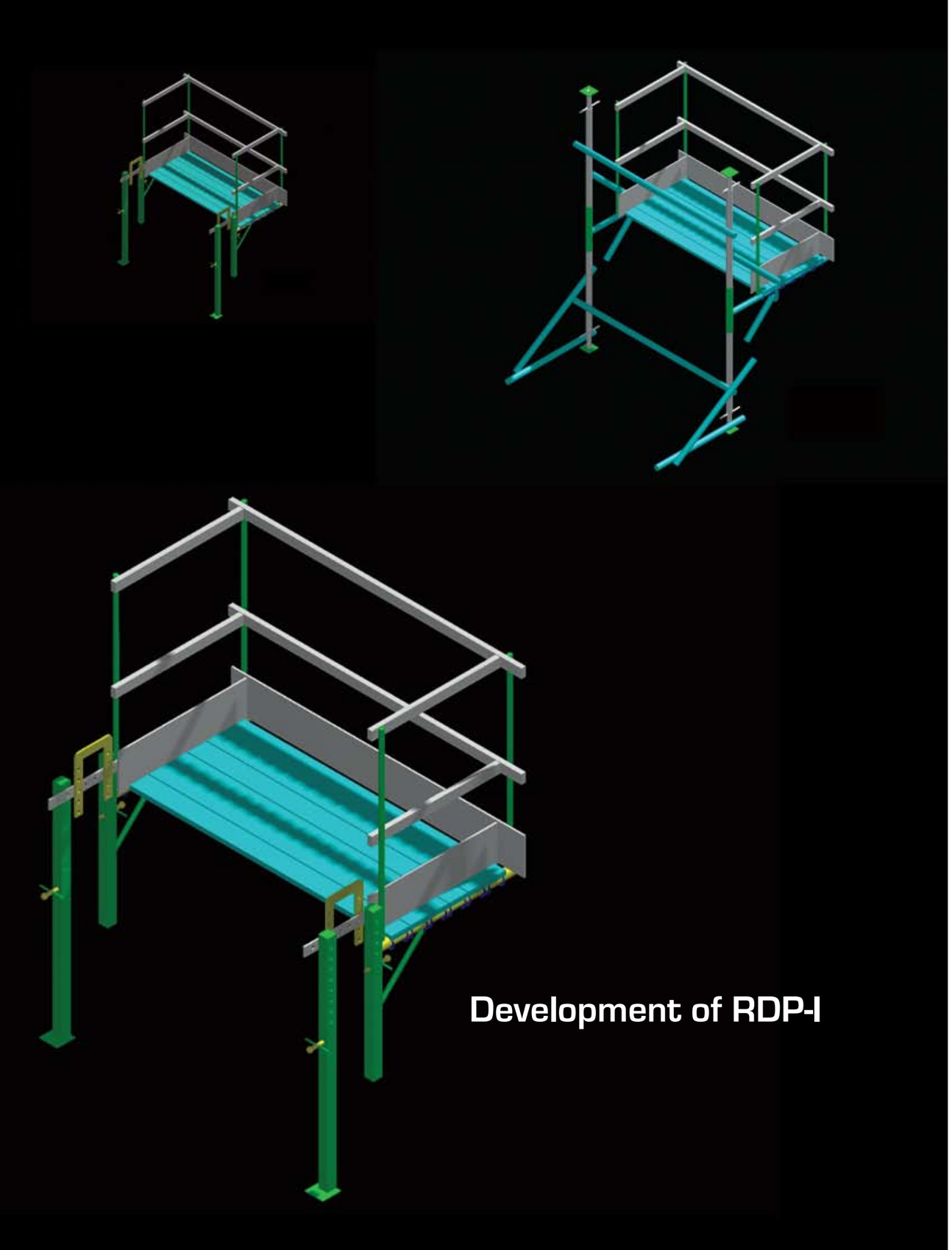

2. Development of RDP-I

The RDP-I was designed to be hung over the building wall and eliminate the use of anchor bolts. RDP-I was constructed with demountable panels and supported by two supporting frame units and two triangular frame units, each pair of these units held the platform on either side. The supporting frames hung over the building walls. And the triangular frames were slotted into the supporting frames to hold RDP-I. The frames could be adjustable to suit walls of different heights and thicknesses. RDP-I also had railings and toe-boards to prevent the user from falling out. The materials used were existing materials in the laboratory including mainly of steel and wood.

The design for RDP-I has already obtained a patent application number from the People's Republic of China Patent Office (200610009426.9, commencement date 22/02/06, Figure 9).

中华人民共和国国家知识产权局

100101

发文日期

2006 年 3 月 8 日

申请号：2006100094269

专利申请受理通知书

根据专利法第二十八条及其实施细则第三十九条、第四十条的规定，申请人提出的专利申请国家知识产权局予以受理。现将确定的申请号和申请日通知如下：

申请号： 2006100094269

申请日： 2006 年 2 月 22 日

申请人： 香港理工大学

发明名称： 快速可拆卸平台

Figure 9: Patent application number 20061009426.9

The RDP-I was designed to address the previously mentioned problems by eliminating the need to install steel brackets. The special features of the concept lie in the fact that it can be mounted from inside of the building and no anchor bolts are required to be installed on the external walls (hence reduce the risk of falling). The RDP-I can be easily installed/dismantled by a trained worker in a short period of time making it handy to use. In addition, the RDP-I will not require any consumable items (as compared to the conventional bamboo truss-out systems which require anchor bolts and bamboos). The RDP-I presented only an initial concept, further study was required to perfect the design and test for its ability to withstand load. Therefore, this research study presents RDP-I which was designed to address some of these unsolved problems.

Figure 10 shows some illustrations of the RDP-I which were extracted from the patent. Figure 10(a) shows the RDP-I as if it was clamped to a wall in a practical situation, and Figure 10(b) shows the fully installed RDP-I with dimensions in mm.

RDP-I was only an initial design of a concept which arose during conducting the previous research project. Feedback from practitioners and workers in general suggested that the following should be considered:

- **Consider other lightweight materials for the Prototype;**
- **Conduct laboratory testing to ensure the safeness of the Prototype;**
- **Consider how the Prototype could be packaged and transported;**
- **Consider the price of sales and manufacture of the Prototype; and**
- **Consider the usages of the Prototype.**

These considerations were incorporated in the refinement of the RDP-I, and used to further develop RDP-I.

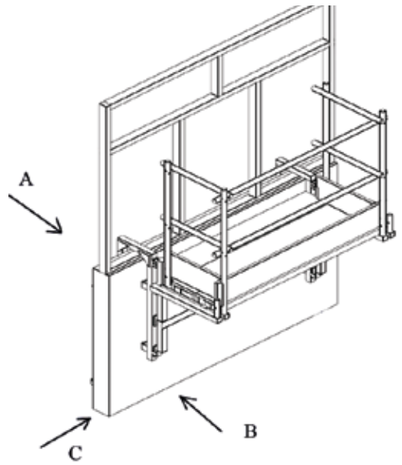

Figure 10(a)

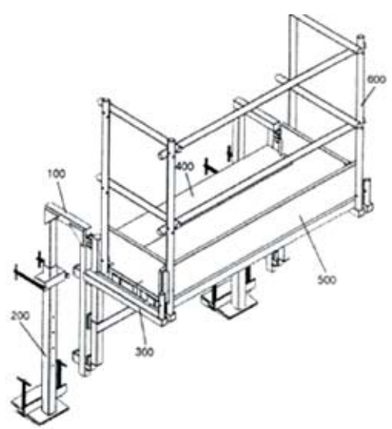

Figure 10(b)

Figure 10: Illustration of RDP-I from the patent.
a) Clamped to wall and
b) Fully installed

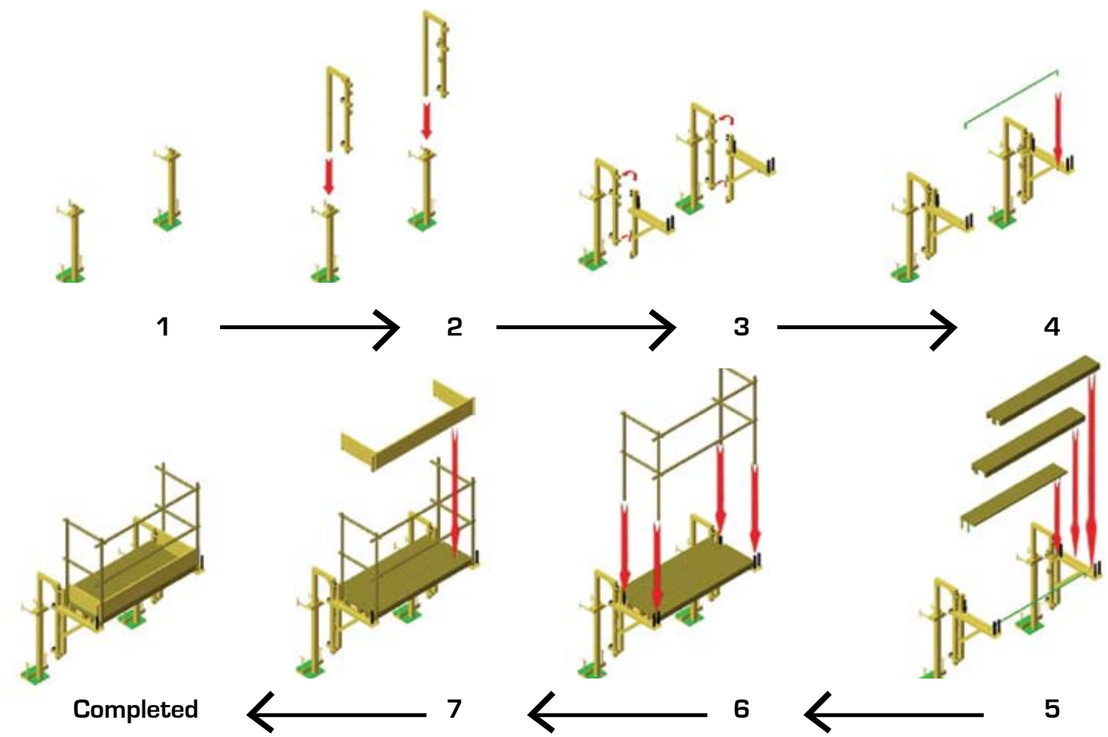

Figure 11: Installation process of the RDP-I

"The RDP-I was designed to address the previously mentioned problems by eliminating the need to install steel brackets. The special features of the concept lie in the fact that it can be mounted from inside of the building and no anchor bolts are required to be installed on the external walls."

Methodology

3. Methodology

The research methodology adopted for this project did not follow the usual procedures in conducting basic research. This project aims to developing a product rather than researching into a topic or an issue.

Due to the skills required to develop RDP-II, the research team was split into three sub-groups according to their expertise to accomplish the tasks required. These sub-groups included the Design Team which as its name implies was responsible for the design and appearance of the RDP-II. In addition, the Design Team, which composed mainly of design engineers, would also look at how components could be designed so that the whole system would be user-friendly to install, dismantle, use and transport. The second team was the Structural Design (Testing) Team and was composed mainly of structural and production engineers. They were mainly responsible for conducting a series of laboratory tests and analysis to ensure the strength and stability of the prototype under loading, and as a result to ensure the safety of the prototype. They were also in charge of the fabrication of the prototype. The third team was the Implementation Team which was composed mainly of project engineers. The team was responsible for collecting responses from workers, practitioners, government departments etc. on the prototype. In order to do so the Implementation Team organised face-to-face interviews, focus group meetings and demonstration sessions. The Implementation Team also produced the installation procedures instructing users to install, dismantle, maintain, use and check the prototype. The sub-teams worked closely together to support each other and the arrangement was found to be synergetic.

Figure 12: Group dicussion for the idea generation of RDP-II

"The research methodology adopted for this project did not follow the usual procedures in conducting basic research. This project aims to developing a product rather than researching into a topic or an issue."

Design of RDP-II

4. Design of RDP-II

The RDP is believed to be a breakthrough for the industry. Not only can it raise the efficiency of construction work at height, but also it can be applied into various circumstances such as, inspection of external walls, fixing water seepage problems, repairing windows, etc., at an economical cost. To enhance the applicability of RDP, several product design concepts have been input in the design of RDP-II.

Figure 13: The outlook of RDP-II

4.1 Design Considerations

From the point of view of "design", we need to consider thoroughly and strike a balance between its practical application as well as marketability. The RDP-II was developed (as in Figure 13) based on the key concerns as follows:

- **User friendliness;**
- **Modular design;**
- **Safeness;**
- **Product semantics; and**
- **Innovative interlocking system.**

4.1.1 User Friendliness

As the name of RDP, rapid and demountable were two key design requirements of the platform. Although different individual needs and preferences of workers - users - may be varied, user-friendliness for most of the workers in rapid installation and demounting was an essential consideration in the design of the RDP. For example, equipment for working at height should be simple in nature because complicated process affects the effectiveness and efficiency of the RDP installation process. Therefore, we applied safe and fast locking systems into the RDP. One of the features was the simple locking devices which could ensure all parts were well locked systematically. Its quick release (and unlocking) system was essential too. In particular, there was no loosing part (such as pins) that all of the moveable and detachable small parts were all well-fixed to the main body or parts of the RDP. This design feature could prevent the fall accidents from the RDP setup and demounting process. As a whole, it was expected a high recognition from workers towards the RDP could be gained.

"simple locking devices which could ensure all parts were well locked systematically."

Figure 14: The application of modular concept

4.1.2 Modular Design

Based on the research analysis through survey, meetings, case studies, and testing; we generated the data to work out the most feasible modular design. The RPD was specially designed because each part was in standard style as in Figure 14.

Workers could set up the RDP easily without any difficulty because of the simplicity and uniqueness of the parts from the appearance, length, size, material, etc. Through simple training and assistance of the installation procedures, the workers could acquire the installation skills easily.

There were two major directions - design philosophy - for the modular design of the RDP. The first direction was that most of the parts with the same function were standard in color, form and dimension. They were exchangeable and also replaceable. In other words, the degree of misplacing the parts with same function was minimised. For example, the platform panels of the RDP were the same. There was no need to have a particular sequence or position of individual panels attached to the RDP.

The second direction was the information - indication - on particular part(s) and module(s) serving particular purpose and drawing attention on specific location. In other words, workers could recognise and distinguish the function and position of individual parts easily. This direction related to the "product semantics" of the design. For examples, the tenons of the railing panels (i.e., the tubes with open-ends of the railing panels) and the sockets for the tenons provided on the base-framework of the RDP were easily be recognised and distinguished by workers during installation. The upper and lower positions and the out-faced and in-faced surfaces of the toe-boards were also easily recognised and distinguished by workers. Although the widths of front-railing panels and side-railing panels were different due to the particular requirement of the available working area, the dimensions of the base-framework gave clear product-semantic information to workers to distinguish and locate the panels in different positions easily.

"Workers could set up the RDP easily without any difficulty because of the simplicity and uniqueness of the parts from the appearance, length, size, material, etc."

Figure 15: Worker installing the RDP-II

4.1.3 Safeness

Safety is the main concern in the design of the RDP. Among all, the simple but critical consideration of the design of the RDP was that it had to be mounted firmly onto the walls.

Moreover, the risk of falling objects was another important consideration in the RDP installation process. Therefore, safety hooks could be found in each part of the RDP. Workers were required to hook each part when they were doing the installation process, hence ensuring safety in this aspect. Also, toe-boards were inserted on outer boundary of the platform. It was linked with the base of the railing panels. This design feature prevented the parts throwing out from the working platform.

In addition, the toe-boards also served as a kind of safety-precaution device in another way by securing other parts of the RDP. For example, the toe-boards could strengthen the framework of the overall railing panels and also secured the platform panels in position.

Bright and florescent color or zebra hatching stripes/patterns were added on some critical parts of the RDP such as the edges of the toe-boards to provide more information - warning - to workers.

"Safety hooks could be found in each part of the RDP. Workers were required to hook each part when they were doing the installation process, hence ensuring safety in this aspect."

Figure 16: Bright and florescent color or zebra hatching stripes/patterns were added on some critical parts of the RDP

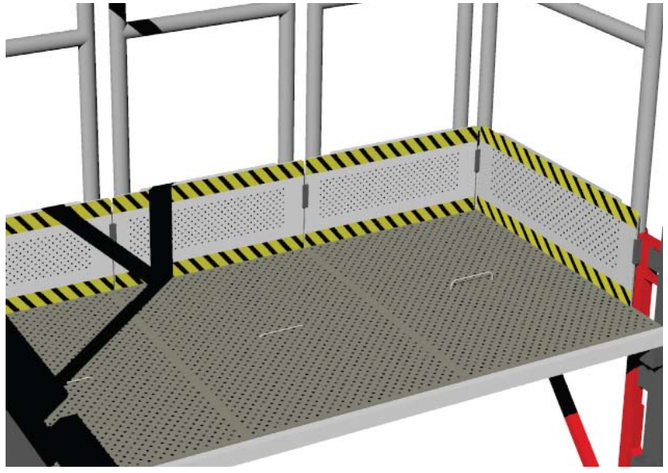

Figure 17: The platform by aluminum

"the total cost could be lowered because it was more durable and more bearable to normal wear and tear."

For RDP-II, the platform panels were made of aluminum (Figure 17). Thus, the panels provided a strong support for the working environment. It was more durable and suitable for outdoor working environment because the usability of the platform was greatly improved. Correspondingly, the total cost could be lowered because it was more durable and more bearable to normal wear and tear. As indicated in Figure 18, sinkholes of the panels were provided to stop water from cumulating on the platform. The sinkholes also formed a non-slippery surface to avoid workers from slipping in a soggy environment. Attached handles were provided to allow easy placing and removing of the platform panels.

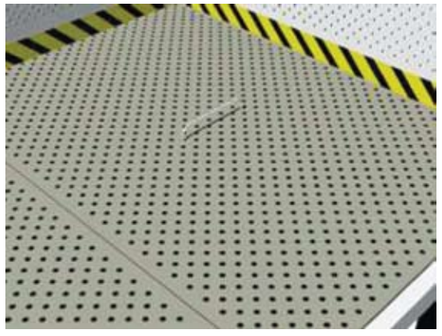

Figure18(a)

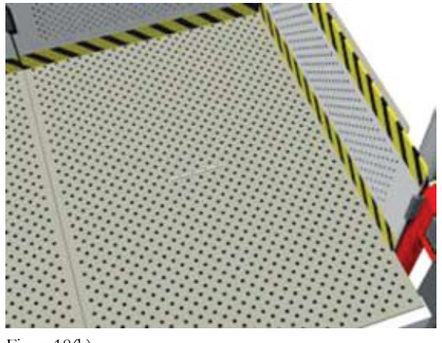

Figure18(b)

Figure 18: (a) Sinkholes of the panels
(b) Attached handle in the platform

4.1.4 Product Semantics

As indicated above, product semantics was one of the emphases in the RDP (Figure 19).

Symbolic meanings of the products were important to workers. The interpretation (i.e., feeling, perception) feeling of a product affected the confidence of the workers towards it and even its application among the public. In the RDP, the dimensions of the railing panels and platform panels (e.g., thickness) were carefully designed for the loading needs.

Moreover, the design of each part of the RDP was specially considered to give clear messages to workers on how to use it. For example, looking at the interlocking system of the railing panels, workers could easily understand and recognise how the system should be operated. The bright and florescent color of the toe-boards caught the attention of workers to prevent accidents.

The installation of the overall structure of the RDP was in a logical sequence. Starting from the overall framework to small particular parts; and from the bottom to the upper parts were good illustration of the logical sequence of the installation of the RDP. Overall speaking, quantity and quality were two pivotal elements in our design which enabled workers to use it with confidence.

"The bright and florescent color of the toe-boards caught the attention of workers to prevent accidents."

Figure 19: The concept of product semantics reflected by the reflective label toe-boards

4.1.5 Innovative Interlocking System

There were several breakthroughs in the design of the RDP. For example, a new interlocking system was applied for securing two railing panels together in a safe and also convenient way.

The interlocking system was magnified in (Figure 20). The system was attached at the top of each railing panel. It could provide flexible lock with horizontal rotations (Figure 21). Workers could fix all railing panels together through the interlocking system.

Moreover, the toe-board was designed not only to serve as a guard to prevent falling of objects and accidents, it was also used to secure the platform panels in position; and no additional device was required to satisfy the latter function.

Figure 20: The interlocking system on the railing of RDP

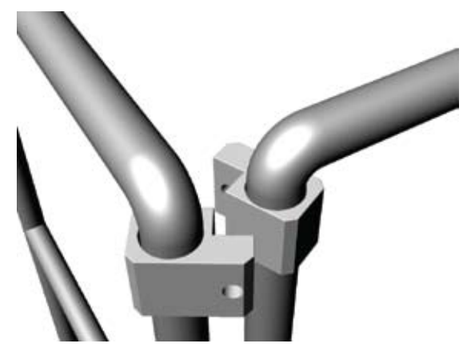

Figure 21(a)

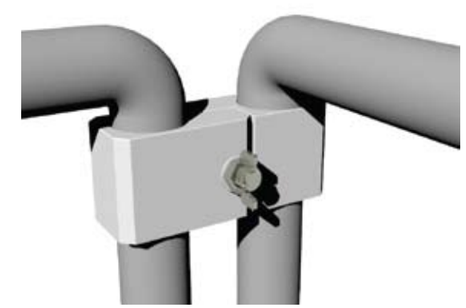

Figure 21(b)

Figure 21: The interlocking system in (a) Locking format and (b) Opening format

"a new interlocking system was applied for securing two railing panels together in a safe and also convenient way."

Figure 22: The interlocking system in two directions

4.2 Description of RDP-II

With the incorporation of the design considerations, the RDP-II was greatly modified and the installing/dismantling procedures have been updated accordingly.

In the fabrication of RDP-II, steel and aluminum alloy were adopted as the major structural materials. The railings were made of stainless steel pipes; and the platform panels and toe-boards were aluminum alloy. Except the change in materials in items 3 & 4, the four major units remain the same as in RDP-I . They are:

Supporting frame unit (SFU) (Figure 23);
Triangular frame unit (TFU) (Figure 24);
Platform panels unit (PPU) (Figure 25a and 25b) and,
Railing panels and toe-boards unit (RTU) (Figure 26a and 26b).

The SFU and TFU were manufactured using SHS of 50×30×3mm and 25×25×2.5mm respectively with Grade S355 steel. Three square PPUs made by aluminum alloy rest on the TFUs. Four sets of railing panels in stainless steel were slotted into the sockets and were securely fastened by pins. The five toe-boards were also made of aluminum alloy. The total weight of the RDP-II is 81kg. The SFUs are the heaviest unit among the four.

"In the fabrication of RDP-II, steel and aluminum alloy were adopted as the major structural materials."

Figure 23: Supporting frame unit (SFU)

Figure 24: Triangular frame unit (TFU)

Figure 25(a): Platform panels unit (PPU)

Figure 25(b): Platform panels unit (PPU)

Figure 26(a): Railing panels and toe-boards unit (RTU)

Figure 26(b): Railing panels and toe-boards unit (RTU)

4.2.1 Installing/Dismantling Procedures

The installing/dismantling procedures of the RDP-II were described as follows:

Set up the SFU to the parapet wall through the window frame. The SFU can be adjusted to appropriate height. Gently tighten the screws on the SFU to bear against the wall (Figures 27 and 28).

Figure 27: Exterior SFU setting

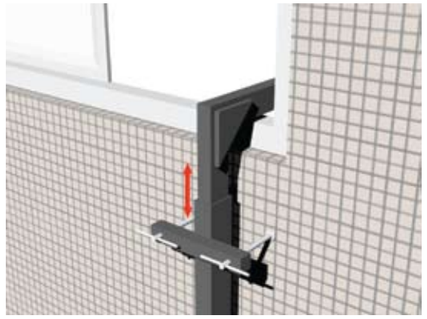

Figure 28: Adjust to appropriate height

Install the TFU to the SFU at the desired level. Insert the anchor pin into the slot at the top of the TFU and SFU (Figures 29 and 30).

Repeat Steps 1 and 2 for the other end of the system.

Figure 29: Install the TFU to the SFU

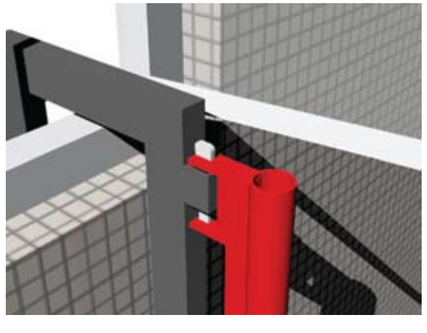

Figure 30: Anchor pin into the slot

Install the PPU to the TFU. Slot each set of RTU to the SFU and secure by the pin on the socket (Figures 31 and 32).

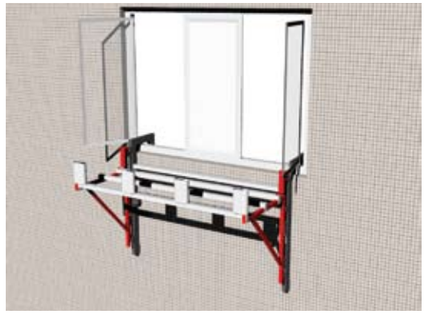

Figure 31: Install the PPU to the TFU

Figure 32: Secure the PPU and TFU by pin

Interlock the RTU by the pre-installed locking system on the railing panels. Check the tightness of the screws of the SFUs (Figures 33 and 34).

Figure 33: Install railing panels to the PPU

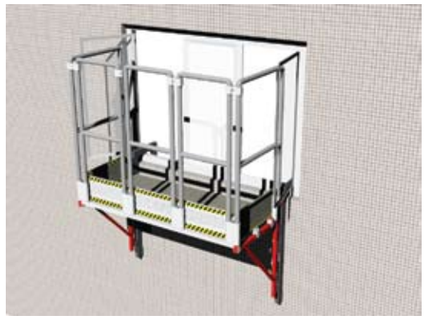

Figure 34: Install toe-board to the PPU

The installing and dismantling could be carried out from inside the building. It has been demonstrated that the installation of RDP-II could be completed within 10 minutes which is about 5 minutes faster than the previous model. Also, the dismantling is only the reverse of the above process. Such design is handy and could be easily erected by one worker.

Conclusion and Recommendation

5. Conclusion and Recommendation

With reference to the previous Stage I project of "Construction Safety Involving Working at Height for Residential Building Repair and Maintenance", the high accident rate on fall resulted from residential building repair and maintenance works has urged for an imperative solution. In this connection, an alternative temporary working device, the RDP, was thereby conceived. The initial design of RDP has brought to the current project for fine-tuning in the aspects of user-friendliness and safeness.

5.1 Comparison between RDP and the Bamboo Truss-out Scaffold

The Rapid Demountable Platform (RDP) is intended to provide a safe, rapidly installed, temporary working platform for undertaking outdoor building repair and maintenance works at height.

Despite the popularity of using bamboo platforms in the current practice, they are risky because workers have to climb out of a building to erect them. The RDP could be installed from inside a flat. By not requiring anchor bolts to fix the triangular steel brackets, the demountable platform eliminates the risks of structural failure of the anchor bolts or collapse of the entire platform due to bolts which have not been securely or correctly anchored.

The platform would cost from HK$6,000 to HK$10,000 per set, while the bamboo alternative costs HK$2,000 to HK$3,000 per time. Although the demountable platform has a higher initial cost, it could last for at least 5 years if properly maintained; while a bamboo platform could be used only 2 or 3 times. Given the price, an RDP costs only HK$2,000 every year. If it is used 10 to 20 times, every usage costs only a few hundred dollars – it is a good bargain in the long run.

The platform was quicker to install and dismantle than a bamboo one. It could be erected in 10 minutes, while a bamboo platform could take 3 hours to build and 2 hours to dismantle. Therefore at the end of each working day, the worker could dismantle the temporary platform without much hassle, thereby ensuring peace in mind to the occupier of the apartment requiring maintenance work to avoid potential break-in cases if a bamboo platform was left outside the building.

The platform is engineer designed to bear a weight of 200 kg (equivalent to 2kPa). However, the platform also has its limitations in that it could not be used in bay windows or on windows with a planter; it could not reach around corners and is not as flexible as a bamboo platform.

A comprehensive comparison between RDP-II and the Bamboo Truss-out Scaffold is presented in Table 2; whereas the comparison between the two versions of RDP-I is depicted in Table 3.

Figure 35(a): Bamboo scaffold for construction

Figure 35(b): RDP-II

Table 2: Comparison between Bamboo Truss-out Scaffold and RDP-II

Attribute	Bamboo Truss-out Scaffold	RDP-II
Materials	Bamboo, wooden planks (have to carry through living areas)	Steel, aluminum panels, stainless steel railings (light weight and tidy)
Durability	Limited life	Compact, durable and repeated usage
Engineering design	Trade practices	Yes
Need for anchor bolts	Yes, at least three pieces	Not required
Damage to external walls	Yes	No
Installation place	Outside the building	Inside the building
Risk of falling objects	High, especially with many loose parts	Minimal
Training requirements for erector	Skillful bamboo scaffolders	Any worker with adequate training
Cost	$2,000 - $3,000 per **TIME**	$6,000 - $10,000 per **SET**
Speed of erection	3 hours for erection; 2 hours for removal by **TWO** scaffolders	10–15 minutes each for erection and removal by **ONE** competent worker
Security risk	High	Minimal

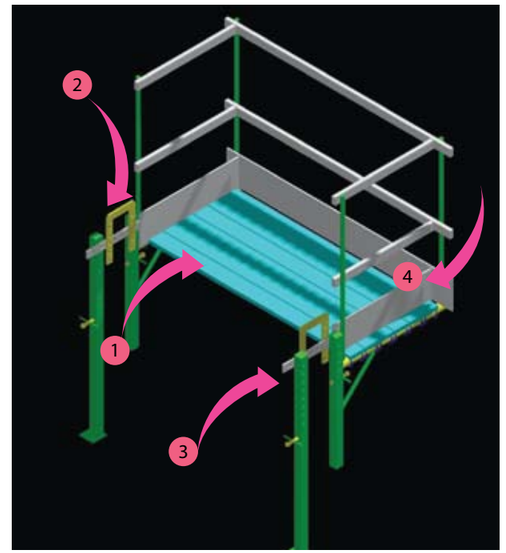

Figure 36(a): RDP-I

Figure 36(b): RDP-II

Table 3: Comparison between RDP-I and II

Attribute		RDP-I	RDP-II
Materials	1. Standing panels	Hardwood	Aluminum alloy panels with sinkholes
	2. U-frame and triangular frame	Steel SHS in 40×40×3mm Grade 43	U-Frame: 50×30×3mm steel RHS Triangular frame: 25×25×2.5mm steel SHS Grade S355
	3. Railing panels	Galvanised iron pipes	Stainless steel pipes of type SS202, external diameter of 32mm and thickness of 1.5 mm
	4. Toe-boards	Hardwood	Aluminum alloy panels
Design	Modular concept	Local design	Standing panels and railing panels in unit dimension
	Product semantics	Local design	Toe-boards and base support in zebra stripes
	Standing boards	3 rectangular planks in longitudinal direction	3 square sheets in transverse direction
	Interlocking system	Fixing by pins	A pair of C-ring with screw attached made using aluminum type A16061
Installation time		15 minutes	10 minutes (33% less)
Weight		95kg	81kg (15% less)

5.2 Potential Applications

The RDP provides a safe, fast and easy to install/dismantle temporary working platform for general external building inspection, repair and maintenance works. Old residential buildings in urban areas are suitable for the erection of RDP. The RDP could rest on the window frame without the hindrance of window bay. The RDP is feasible in applying on small-scale maintenance works, as proposed below:

- **External building inspection;**
- **Temporary working platform for installing bamboo truss-out scaffold (alternative);**
- **Change of air-conditioning unit;**
- **Maintenance on plumbing/drainage system;**
- **Painting;**
- **Plastering;**
- **Tiling/rendering; and**
- **Fixing of water seepage.**

Old residential buildings in urban area are suitable for the erection of RDP. Typical examples have been captured in Figure 37.

Figure 37: Typical examples of old residential buildings in urban areas of Hong Kong

"The RDP provides a safe, fast and easy to install/ dismantle temporary working platform for general external building inspection, repair and maintenance works."

Figure 38(a): Side view of RDP-II

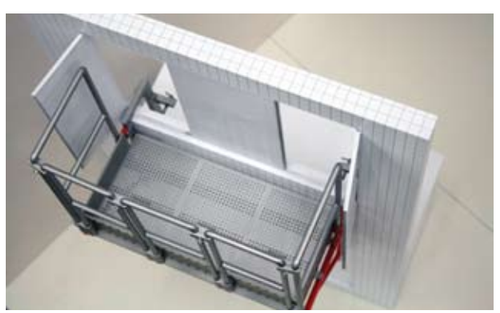

Figure 38(b): Top view of RDP-II

Figure 38(c): Underneath view of RDP-II

5.3 Proposed Market Launch of RDP

The flowchart indicated in (Figure 39) explicitly outlines the proposed steps of RDP market launch. Being the RDP designer, the research team is responsible for managing the supporting documents which include testing certification from accredited laboratory and the application of patent. Once the license is secured, the production of RDP will be outsourced to licensed manufacturer based on the finally approved design. Maintenance contractors or property management companies could purchase the RDP system from the appointed distributors or suppliers. To fit for specific conditions of application, both purchase and rental schemes are proposed. The responsibility of insurance shall fall onto the RDP owners. For the case of renting, users are supposed to bear the insurance fee which is supposed to be included in the rent fee. Proper use of RDP shall be ensured through recognised training courses. Certification issued from authorised party should be acquired prior to the use while inspection and maintenance works shall be responsible by competent persons who are qualified from relevant recognised training.

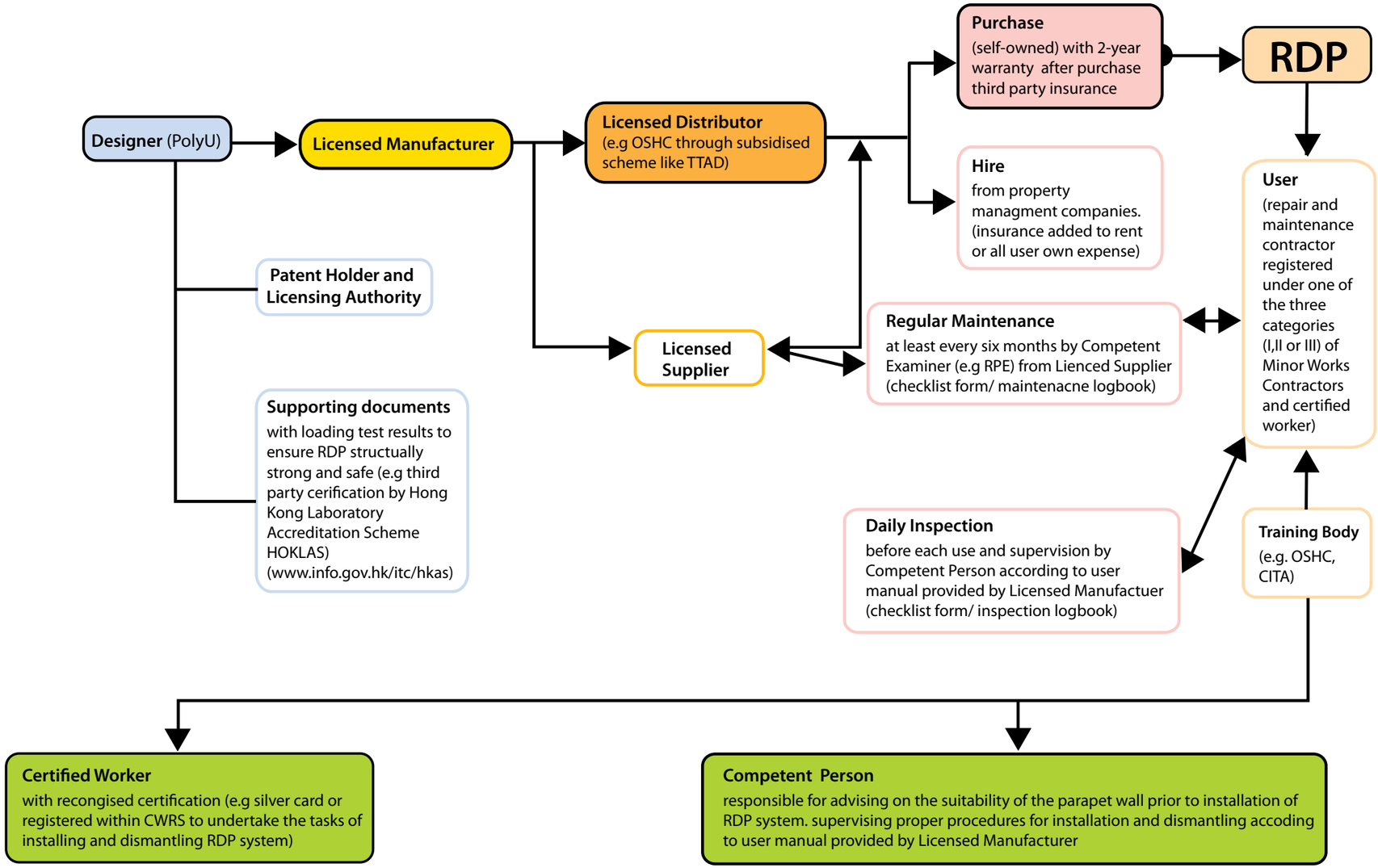

Figure 39: Flowchart showing the market launch of the RDP in building, construction, repair and maintenance sector

5.4 Recommendations for Further Improvement

5.4.1 General Recommendations

- **Search for efficient solution to determine the suitability of external parapet wall for the use of RDP should be conducted.**
- **A detail examination on the application procedure for certification or recognition should be carried out. For example, inputs from the Labour Department could provide instructions or necessary information for the commissioning process.**
- **The packaging design should be further considered for the transportation of RDP to the work site.**

5.4.2 Technological Recommendations

- **Platform panels could be coated with plastic material to avoid slippage and electrical insulation.**
- **The pins for fixing could be more rigid.**
- **A leveling bubble could be attached to the base support or the railing panel of RDP to ensure the installation is level.**

5.5 Benefits of the Research

This study mainly focused on the production of the RDP-II as an alternative platform to reduce fall accidents involved in working at height. A comprehensive investigation has been carried out before the production of RDP-II. While the RDP-I was made from readily available materials in the laboratory, engineering design and industrial comments were included in the development of RDP-II. Moreover, the strength and safety of RDP-II was verified by a series of structural testing.

The RDP is a brand-new device which is particularly suitable for small-scale external maintenance works involving working at height. It does not cause damages on the external wall; and furthermore, this device could eliminate the necessity to hire a separate trade to erect the bamboo truss-out scaffold which is always costly to small-scale projects.

References

1. Apple Daily Newspaper (2006), 太和中心塌棚過程, December 2006, (Chinese version only), 2006.
2. CII-HK (2007), Construction Safety Involving Working at Height for Residential Building Repair and Maintenance, Research Summary Report – Construction Safety, Construction Industry Institute – Hong Kong (CII-HK), Hong Kong, Research Report No. 9, 52 pages, ISBN 978-988-99558-1-6, November 2007.
3. Oriental Daily Newspaper (2005), 飛墮七樓搭棚工跌死, (Chinese version only), 2005.
4. Sing Tao Newspaper (2007), 前賭王高可寧豪宅裝修跌死人, 6 January 2007, (Chinese version only), 2007.
5. Ming Pao Newspaper (2005), 未扣安全帶搭棚工墮樓亡, (Chinese version only), 2005
6. OSHC (2007), <http://www.labour.gov.hk/eng/osh/pdf/OSHstatistics06.pdf> (accessed on 7 September 2007), Occupational Safety and Health Statistics (OSHC), The Hong Kong SAR Government, 2007.

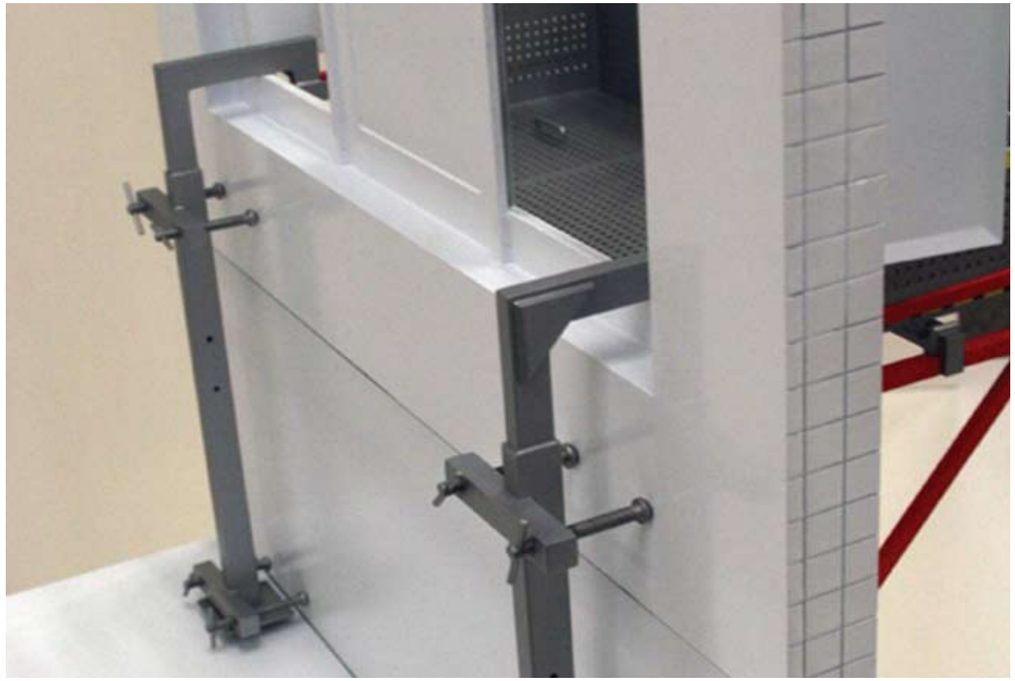

Figure 40: Close up of RDP backside

Awards and More

Figure 41: Gold Medal with Special Commendation of the Jury

The Rapid Demountable Platform (RDP) was awarded the Gold Medal with Special Commendation of the Jury (the highest award in its class) plus the National Authority for Scientific Research Award of the Romania Ministry of Education, Research and Youth for the High Scientific and Technological Level of the Invention at the 36th International Exhibition of Inventions, New Techniques and Products held in Geneva, Switzerland on 2-6 April 2008. The exhibition is the largest and most important exhibition exclusively devoted to inventions in the world, with more than 700 exhibitors from 45 countries presenting nearly a thousand inventions, and over 70,000 visitors in just 5 days.

Figure 42: The National Authority for Scientific Research Award of the Romania Ministry of Education, Research and Youth for the High Scientific and Technological Level of the Invention

CIOB

24 March 2009.

The Chartered Institute of Building
Englemere, Kings Ride
Ascot, Berkshire SL5 7TB
Tel: +44 (0) 1344 630780
Fax: +44 (0) 1344 630777
Email: reception@ciob.org.uk
www.ciob.org.uk

Professor Albert P C Chan, PhD FCIOB
Professor and Associate Head
Department of Building and Real Estate
The Hong Kong Polytechnic University
Hung Hom Kowloon Hong Kong
PRC

Dear Professor Chan,

Re: The Chartered Institute of Building International Innovation and Research Awards 2008/09.

I am delighted to advise that the judges have awarded the paper **'DEVELOPMENT OF A RAPID DEMOUNTABLE PLATFORM FOR UNDERTAKING BUILDING REPAIR AND MAINTENANCE WORKS AT HEIGHT IN HONG KONG'** is the winner to the Chartered Institute of Building's Innovation Achiever's Award for 2008/09.

There will be an Award's evening to be held at Englemere, Ascot on Thursday 14 May 2009 and we look forward to welcoming you and presenting this richly deserved award.

Please accept our warmest congratulations to you and the team.

Yours sincerely,

Sarah Peace
Research Manager

Direct tel: 01344 630 740
Direct fax: 01344 630 713
Email: researchadmin@ciob.org.uk

Figure 43: The RDP won another prestigious international award, the Innovation Achievers Award, from the Chartered Institute of Building (CIOB), UK in 2009. The aim of the award is to encourage the sharing of innovative ideas and practices, which can provide real benefits to members and other practitioners operating within the construction industry. Prof. Albert Chan will represent the team to receive the award on the 14th May in Englemere, UK

Figure 44: **Dr. Nicolas Yeung** (left) and **Prof. Albert Chan** (right) with His Excellency **Mr. Ionel Sava** (centre), Romanian Ambassador to Switzerland, after the Award Presentation

"The RDP-I s an applicable by-product of the collaborative research on Construction Safety Involving Working at Height for Residential Building Repair and Maintenance."

Construction Industry Institute
HONG KONG

Enquiries

Any enquiries about this research study can be directed to either Prof. Albert Chan, Project Leader, Department of Building and Real Estate, The Hong Kong Polytechnic University at Tel: 2766-5814 or via email: bsachan@polyu.edu.hk or Dr. Nicolas Yeung, Director of CII-HK at Tel: 2839-7328 or via email: nyeung@ciihk.org.hk

This Summary Report summarises the key findings and recommendations of the Full Report which is contained in the enclosed CD. Readers are advised to refer to the Full Report for details, when necessary.

Construction Industry Institute
HONG KONG

Developing a Prototype for the Rapid Demountable Platform (RDP)

Stage II of CII-HK Research on
"Construction Safety Involving Working at Height for Residential Building Repair and Maintenance"

"The RDP provides a safe, fast and easy to install/dismantle temporary working platform for general external building inspection, repair and maintenance works."

"The RDP is an applicable by-product of the collaborative research on "Construction Safety Involving Working at Height for Residential Building Repair and Maintenance."

Construction Industry Institute
HONG KONG