Available online at www.sciencedirect.com

ScienceDirect

Energy Procedia 158 (2019) 3202–3207

Energy Procedia

www.elsevier.com/locate/procedia

10th International Conference on Applied Energy (ICAE2018), 22-25 August 2018, Hong Kong, China

Optimal Design of Multi-zone Air-conditioning Systems for Buildings Requiring Strict Humidity Control

Chaoqun Zhuang, Shengwei Wang*, Rui Tang

Department of Building Services Engineering, The Hong Kong Polytechnic University, Kowloon, Hong Kong

Abstract

The air-conditioning systems in buildings, requiring strict space humidity control, are usually very energy intensive, where significant energy would be wasted if the system is not properly designed and controlled. Conventional design method in such buildings usually selects the air-conditioning systems based on certain cooling load and experiences without comprehensively considering the control strategies involved. This paper, therefore, proposes a novel optimal design method to size the air-conditioning systems by quantifying the input uncertainties for cooling load calculation and adopting the "adaptive full-range decoupled ventilation strategy" (ADV strategy). The main objective of the proposed design method is to minimize the life-cycle total cost of air-conditioning systems adopting the alternative decision-making criteria. A hybrid genetic algorithm and particle swarm optimization algorism (GA-PSO) is used for design optimization. Results show that the proposed method can minimize the life-cycle costs of air-conditioning systems and provides promising solutions for designers to make better compromised decisions.

Keywords: optimal design; adaptive full-range decoupled ventilation; strict humidity control; air-conditioning system

1. Introduction

The energy use of buildings has increased significantly in recent years due to the population growth, the strict requirements on indoor environment control, the global warming, etc. [1]. Strict space humidity control is required in many applications such as hospitals, manufacturing facilities, pharmaceutical cleanrooms, art galleries, libraries and other commercial facilities [2]. In such applications, design and selection of an appropriate air-conditioning system require that the system meet both sensible and latent loads simultaneously under different possible operational conditions. The air-conditioning systems should be properly designed to meet the requirements of different working

* Corresponding author. Tel.:+852 2766 5858; fax: +852 2774 6146.
E-mail address: beswwang@polyu.edu.hk

10.1016/j.egypro.2019.01.1008

conditions and the ventilation strategies, otherwise some problems such as over/under-sizing of air-conditioning components and energy waste would occur [3]. However, the conventional design of air-side air-conditioning systems is usually based upon sizing the components individually to meet the peak cooling or dehumidification duty without comprehensively considering the coordination of different components and control strategies possibly involved [4].
In order to achieve an optimal design of the air-side air conditioning system, an optimal design method is proposed in this study. The design adopts the "adaptive full-range decoupled ventilation strategy" (ADV strategy), which shows superior energy performance under the weather and internal load conditions. In addition, various input uncertainties of multi zones in buildings are considered. The procedures for implementing this method are introduced and a case study of a pharmaceutical factory in Hong Kong is also selected to test and validate the proposed method.

2. Optimal design method for air-side air-conditioning subsystem

A typical air-conditioning subsystem configuration, i.e. a blow-through type MAU and a draw-through AHU served for multi zones, is selected as shown in Fig. 1. The MAU consists of filters, a centrifugal fan and a cooling coil for treating the outdoor air. The AHU contains filters, a cooling coil, a heater, an axial fan and a humidifier for conditioning the total supply air. The chilled water is supplied by a chiller plant to both MAU and AHU cooling coils.

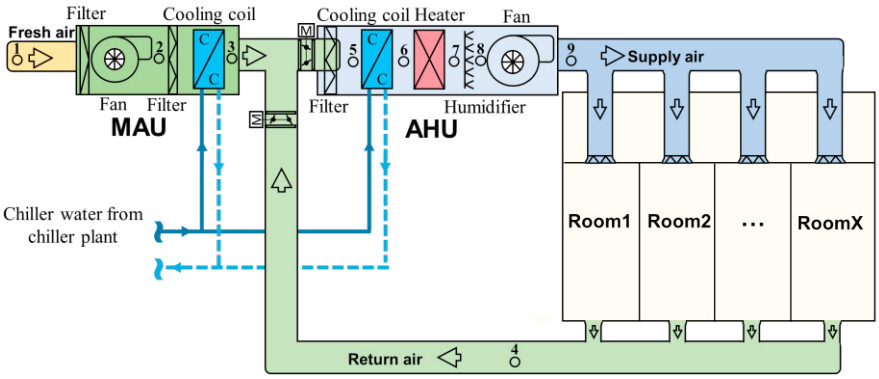

Fig. 1 System configuration of a typical air-conditioning system

2.1. Description of adaptive full-range decoupled ventilation strategy (ADV strategy)

There are three existing ventilation strategies which are adopted by the air-conditioning systems in the current literature. "Interactive control strategy" (IE strategy) consorts to simultaneously cooling and heating for controlling indoor temperature and humidity, where the MAU outlet air temperature is controlled close to indoor temperature and the outdoor airflow is always set as a minimum. "Dedicated outdoor air ventilation strategy" (DV strategy) [5] fully decouples cooling and dehumidification by the combined use of make-up air-handling units (MAUs) and air-handling units (AHUs), where the MAU undertakes all indoor redundant latent load and part of the sensible load while the AHUs remove the residual sensible load. In this strategy, the outdoor airflow can be induced higher than its minimum setpoint. "Partially decoupled control strategy" (PD strategy) [6] is a method that always induces the minimum outdoor airflow and sets MAU outlet air temperature lower than indoor air dew-point. When the indoor latent load is not high, the minimum outdoor airflow is enough for removing all indoor moisture due to the low MAU outlet temperature, which operates like the DV strategy. Otherwise, it operates similarly to IE strategy.
The proposed ventilation strategy incorporates the advantages of the PD strategy, the DV strategy and an adaptive economizer, which minimize the energy consumption by compromising properly "inducing more outdoor air" and "sub-cooling and reheating process with minimum outdoor airflow", and offers superior energy-efficiency over the full range of internal load and weather conditions.

2.2. Multi-zone air-conditioning subsystem energy models

The total energy consumption of the air-side components is calculated using Eq. (1), which includes the energy use of the MAU/AHU cooling coils, the AHU heater and humidifier, terminal heater, the make-up air fan and the supply air fan.

$$E_{tot} = \frac{Q_{cc,MAU}+Q_{cc,AHU}}{COP_c} + \frac{Q_{he,AHU}}{COP_{he,ahu}} + \frac{Q_{hu,AHU}}{COP_{hu}} + \frac{\sum_{i=1}^{n} Q_{he,room,i}}{COP_{he,room}} + W_{mf} + W_{sf} \quad (1)$$

Fan model

The electricity consumptions of MAU/AHU fans using Eq. (2). Where, W_f, is total fan power (kW). V is air volumetric flow rate (m^3/s). Δp is total pressure rise (kPa). η_f is fan efficiency.

$$\mathrm{W_f} = V\Delta p/n_f \quad (2)$$

Supply air status for multi-zone

For the air-conditioning subsystem, the supply air temperature and supply air volume are determined as follows:

- The supply air volume of each zone is calculated at the design stage using the equation shown below:

$$m_{s,i} = Q_{sen,i,d}/(c_p\Delta t) \quad (3)$$

where $m_{s,i}$ is the supply air volume of zone i (kg/s), $Q_{sen,i,d}$ is the design sensible cooling load of zone i (kW), Δt is the designed temperature differences between supply and return air (°C).

- The supply air temperature is determined at each time step.

$$t_9 = min[t_{set,i} - Q_{sen,i}/(c_p m_{s,i})] \quad (4)$$

where T_9 is the supply air temperature at a given time step, $t_{set,i}$ is the cooling set point of zone i at this time step, $Q_{sen,i}$ is the sensible cooling load of zone i (kW) at this time step, c is the air specific heat ratio (kJ/(m^3•°C), Δt *is* the designed temperature differences between supply and return air (°C).

- The supply air humidity is determined at each time step.

$$t_{room,i} = t_9 + Q_{sen,i}/(c_p m_{s,i}) \quad (5)$$

$$\mathrm{w_9} = min\{W_{\mathrm{room,i}} - [Q_{sen,i}(1 - SHR_i)/SHR_i]/(h_{fg} m_{s,i})\} \quad (6)$$

where $T_{room,i}$ is the indoor temperature of zone i at a given time step, SHR_i is the sensible heat ratio of zone i at this time step, h_{fg} is latent heat of vaporization (kJ/kg).

System energy balance model

The thermodynamic states of the system are determined by heat balance Eqs. (7)-(11) with the following main assumptions: 1) The pressure drop through the duct is constant with no air infiltration or leakage and the air heat loss through the duct is ignored. 2) The minimum set-point of the MAU and AHU outlet temperature is the same (e.g. 12°C). 3) The saturated relative humidity is set at 95% when processed air reaches the apparatus dew point.

$$t_8 = t_9 - \varepsilon W_{sf}/(m_s c_p) \quad (7)$$

$$Q_{cc,AHU} = (m_s - \alpha m_s)h_4 + \alpha m_s h_3 - m_s h_6 \quad (8)$$

$$Q_{he,AHU} = m_s(h_7 - h_6) - \varepsilon W_{sf} \quad (9)$$

$$Q_{cc,MAU} = \alpha m_s(h_1 - h_3) + \varepsilon W_{mf} \quad (10)$$

$$Q_{he,room,i} = c_p m_{s,i}(t_{room,i} - t_9) \quad (11)$$

$$Q_{hu,AHU=} m_s h_{fg}(w_8 - w_7) \quad (12)$$

where α is the outdoor air ratio, ε is the motor installation factor, c_p is the air specific heat ratio (kJ/(m^3•°C).

2.3. Optimal design under alternative decision-making criteria

Several decision making criteria [7], such as expectation value (E), minimin, minimax, Hurwicz criterion (Hurw), Value-at-risk (VaR) and Conditional Value-at-risk (CVaR), which covers the decision attitudes towards realist, optimist, pessimist and opportunist, are adopted in this study.

The objective of the optimal design is to ensure the annualized total cost to be minimum.

$$TC_{annual} = CC_{annual} + OC_{annual} + MC_{annual} + PC_{annual} \quad (13)$$

where TC_{annual} is annualized total cost ($), CC_{annual} is annualized capital cost (obtained from [8] according to components capacities), OC_{annual} is annualized operation cost (electricity cost), MC_{annual} is annualized maintenance cost (set as 20% of annualized capital cost), PC_{annual} is annualized penalty cost.

2.4. Implementation of optimal design approach of the air-side air-conditioning systems

To obtain the optimal configuration for the air-side air-conditioning systems, several steps are needed as follows and shown in Fig.2:

- Obtain the sensible and latent cooling load distribution through qualifying the uncertainties of operation factors and calculate the supply air state according to the asynchronous cooling and dehumidification demand of multi zones.
- Optimize air-side components using a hybrid genetic algorithm and particle swarm optimization algorism (GA-PSO). First, a combination of design air-side components capacities is generated. Then, under the given design outdoor airflow rate, a base operation cost is obtained using an ideal building ventilation energy model, which assumes the capacities of cooling and heating equipment are as high as needed. Moreover, the given capacities of the cooling & heating equipment are verified whether can meet the control requirement of the optimal ventilation strategy (e.g. ADV strategy). If not, the near-optimal or other ventilation strategies are adopted to verify whether these methods can meet the control requirements under such cooling & heating equipment capacities. The actual operation cost is then obtained through before-mentioned procedures. If all the ventilation strategies are failed to meet the control requirement, this hour is marked as an unmet hour and the penalty would be given according to the difference of the cooling/heating demand and the available capacities (ten times of electricity price is used in the study). Lastly, verifying whether the objective (annualized total cost) can meet the convergence conditions of criterion and output the optimal design capacities.

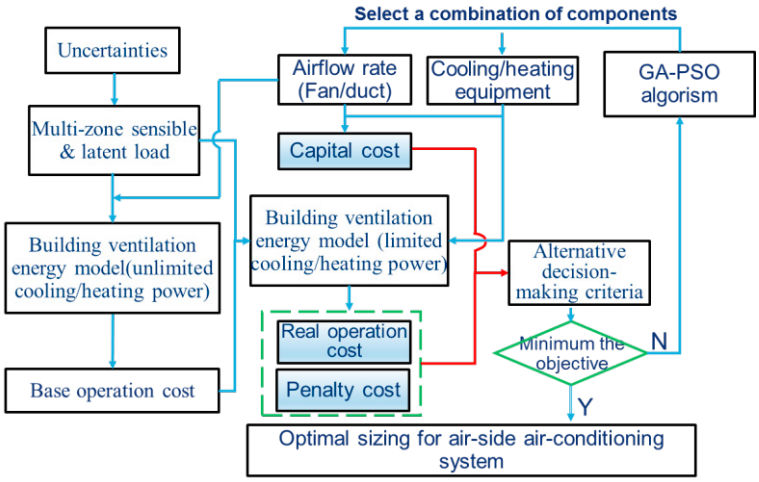

Fig. 2. Flowchart of the proposed optimization methodology.

3. Test building, input parameters and uncertainty

A pharmaceutical factory building located in Tai Po district of Hong Kong is selected to implement the design method. All the production areas are designed as Class ISO 8 cleanrooms. The configuration of a typical cleanroom air-conditioning system, i.e. the system serving part of the cleanrooms (9 zones with an area of 99.56 m^2) at 1st floor, is shown in Fig. 1. For the cleanrooms concerned, the minimum total supply and outdoor airflow rates are designed as 20 and 2 air change per hour (1.55m^3/s and 0.16m^3/s) respectively to meet the requirements of indoor cleanness and

pressurization. The 9 cleanrooms are required to be controlled with the temperature ranges from 17 °C to 23°C and relative humidity ranges from 45% to 65%. Through the cooling load simulation according to the input parameters in Table 1, it's found there are no needed to add the humidifier due to the amount of moisture generated during the manufacturing process. Meanwhile, the room terminal heaters are unnecessarily installed since even the minimum supply airflow can remove indoor sensible heat and the supply air temperature is always higher than room low-limit temperature. Therefore, the supply airflow is set as minimum and constant. Only the MAU fan, MAU cooling coil, AHU heater and AHU cooling coil are sized in the study.

Table 1. Input parameters and their uncertainty description.

Group	Parameter	Uncertainty study	
		Distribution	Values
Outdoor weather	Dry bulb temperature of the outdoor air	Actual data: 1979–2016	
	The humidity of outdoor air		
	Global radiation		
	Diffuse radiation		
Building parameters	Internal shading coefficient	Normal	$(0.5, 0.1^2)$
	External shading coefficient	Normal	$(0.2, 0.05^2)$
	U value of windows	Uniform	(1.5, 3)
Indoor condition	Occupant density (m^2/person)	Triangular distribution	10*triangular (0.3, 1.2, 0.9)
	Lighting density (W/m^2)	Triangular distribution	14*triangular (0.3,1.2, 0.9)
	Process sensible load (W/m^2)	Relative normal	$45*(1,0.06^2)$
	Process latent load (W/m^2)	Relative normal	$15*(1,0.06^2)$

4. Results and discussion

The optimal air-side systems configurations per optimization criterion are illustrated in Fig. 3. The Minimin design appeals to be optimistic with the minimum total cooling/heating capacities and design outdoor airflow, while for the Minimax design, the capacities and design outdoor airflow are larger. The capacities using other criteria, such as Hurw, VaR and CVaR design are in-between of those two criteria. The design outdoor airflow towards different objective functions varied between 76.3% to 81.6% of the total supply airflow.

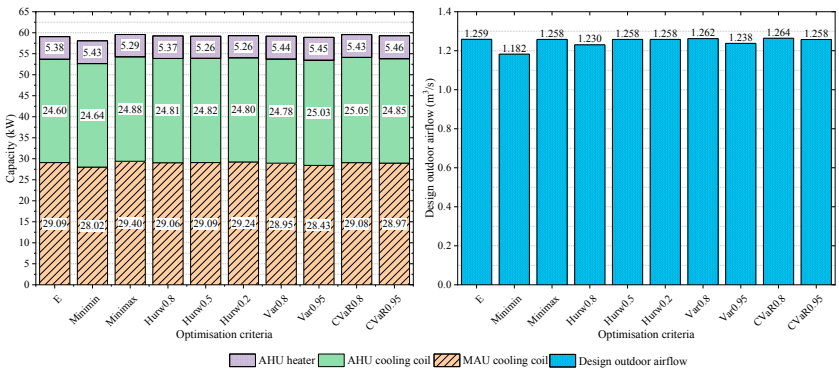

Fig.3 Optimal air-side configurations for the different objective functions.
(Notes: the subscripts represent the weights or corresponding quantile of different criteria)

Besides the air-side components sizing results for the different criteria, additional information can be obtained by comparing the annualized total costs and unmet hours distributions of the scenarios, which are summarised in Fig. 4. In terms of the scenario total costs, the expectation value (E) has the lowest median value, while the scenario cost

ranges of this criterion, indicated by both the minimum-maximum and the interquartile range (25%-75%), is neither the widest nor the narrowest among the criteria. The Minimin criterion attains the widest ranges of the scenario costs among the criteria, and its overall the scenario costs are placed at higher costs compared to all other criteria, which is evidenced by the interquartile range. In terms of the unmet hours, the CvaR design has a comparatively lower value (lower than 21 hours) while the Minimin criterion has the highest level (average 40.7 hours).

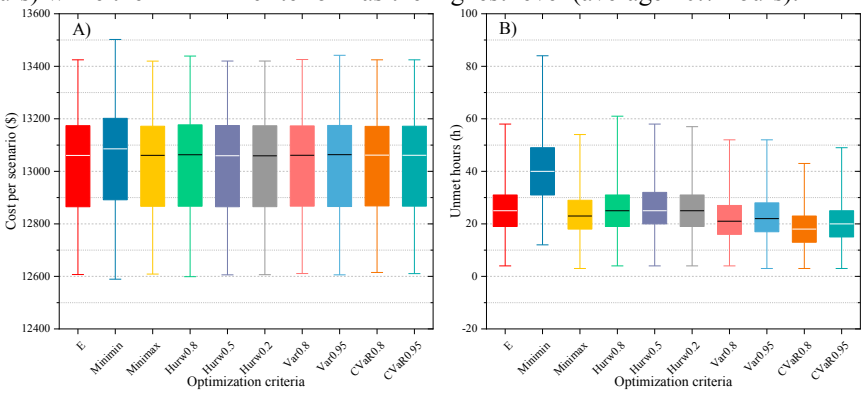

Fig. 4 Variation of A) annualized scenario costs B) unmet hours for the different optimization objectives.

5. Conclusion

In this study, a novel design method is proposed to obtain the optimal air-side air-conditioning systems for buildings requiring strict humidity control by quantifying the uncertainty in multi-zone cooling load calculation and adopting the "adaptive full-range decoupled ventilation strategy". A hybrid genetic algorithm and particle swarm optimization algorism (GA-PSO) is used for sizing the air-conditioning components. Results show that the proposed method can obtain the air-conditioning systems with low cost and provides a promising solution for designers to make their best design decisions.

Acknowledgments

The research presented in this paper is financially supported by a grant under the Strategic Development Special Project of The Hong Kong Polytechnic University.

References

[1] Tang, R, Wang, SW, Shan, K, & Cheung, H. Optimal control strategy of central air-conditioning systems of buildings at morning start period for enhanced energy efficiency and peak demand limiting. Energy, 2018; 151, 771-781.
[2] ASHRAE Handbook. Fundamentals. American Society of Heating, Refrigerating and Air Conditioning Engineers, Atlanta. 2001.
[3] PG&E. A design guideline sourcebook: High performance cleanrooms. San Francisco: Pacific Gas and Electric Company. 2011.
[4] Gang WJ, Wang SW, Shan K, & Gao DC. Impacts of cooling load calculation uncertainties on the design optimization of building cooling systems. Energy and Buildings, 2015; 94, 1-9.
[5] Lee WL, Chen H, Leung Y, Zhang Y. Decoupling dehumidification and cooling for energy saving and desirable space air conditions in hot and humid Hong Kong. Energy conversion and management. 2012; 53:230-9.
[6] Shan K, Wang SW. Energy efficient design and control of cleanroom environment control systems in subtropical regions–A comparative analysis and on-site validation. Applied Energy. 2017; 204:582-95.
[7] Mavromatidis, Georgios, Kristina Orehounig, and Jan Carmeliet. Comparison of alternative decision-making criteria in a two-stage stochastic program for the design of distributed energy systems under uncertainty. Energy, 2018, 156: 709-724.
[8] Mossman MJ. Mechanical Cost Data: RSMeans; 2008.