# Chromatic dispersion monitoring for multiple modulation formats and data rates using sideband optical filtering and asynchronous amplitude sampling technique

**F. N. Khan,* Alan Pak Tao Lau, Chao Lu, and P. K. A. Wai**

*Photonics Research Centre, the Hong Kong Polytechnic University, Hung Hom, Kowloon, Hong Kong*
**08901853R@eie.polyu.edu.hk*

**Abstract:** We propose and experimentally demonstrate a low-cost technique for chromatic dispersion (CD) monitoring in various return-to-zero (RZ) amplitude and phase-modulated systems at different data rates by analyzing the asynchronously sampled amplitudes of two vestigial sideband (VSB) signals. The proposed technique graphically represents the CD induced-effects in a scatter plot of which a parameter is extracted to monitor CD and is resilient to OSNR variations. Simulations and experimental results demonstrate good monitoring ranges and sensitivities for various modulation formats at different data rates without any modification of the monitoring hardware. The influence of first-order polarization-mode dispersion (PMD) on the accuracy of proposed monitoring technique is also investigated.

©2011 Optical Society of America

**OCIS codes:** (060.1155) All-optical networks; (060.2330) Fiber optics communications; (060.2360) Fiber optics links and subsystems; (060.4510) Optical communications; (060.5060) Phase modulation.

## References and links

1. D. Kilper, R. Bach, D. Blumenthal, D. Einstein, T. Landolsi, L. Ostar, M. Preiss, and A. Willner, "Optical performance monitoring," J. Lightwave Technol. **22**(1), 294–304 (2004).
2. A. Willner, K. Feng, S. Lee, J. Peng, and H. Sun, "Tunable compensation of channel degrading effects using nonlinearly chirped passive fiber Bragg gratings," IEEE J. Sel. Top. Quantum Electron. **5**(5), 1298–1311 (1999).
3. T. Kato, Y. Koyano, and M. Nishimura, "Temperature dependence of chromatic dispersion in various types of optical fiber," Opt. Lett. **25**(16), 1156–1158 (2000).
4. Z. Pan, C. Yu, and A. E. Willner, "Optical performance monitoring for the next generation optical communication networks," Opt. Fiber Technol. **16**(1), 20–45 (2010).
5. N. Hanik, A. Gladisch, C. Caspar, and B. Strebel, "Application of amplitude histograms to monitor performance of optical channels," Electron. Lett. **35**(5), 403–404 (1999).
6. B. Kozicki, O. Takuya, and T. Hidehiko, "Optical performance monitoring of phase-modulated signals using asynchronous amplitude histogram analysis," J. Lightwave Technol. **26**(10), 1353–1361 (2008).
7. Z. Li, and G. Li, "In-line performance monitoring for RZ-DPSK signals using asynchronous amplitude histogram evaluation," IEEE Photon. Technol. Lett. **18**(3), 472–474 (2006).
8. S. D. Dods, and T. B. Anderson, "Optical performance monitoring technique using delay tap asynchronous waveform sampling," in Proc. *Optical Fiber Comm. Conf.* (*OFC*), Anaheim, CA, 2006, Paper OThP5.
9. B. Kozicki, A. Maruta, and K. Kitayama, "Transparent performance monitoring of RZ-DQPSK systems employing delay-tap sampling," J. Opt. Netw. **6**(11), 1257–1269 (2007).
10. B. Kozicki, A. Maruta, and K. Kitayama, "Experimental Investigation of delay-tap sampling technique for online monitoring of RZ-DQPSK signals," IEEE Photon. Technol. Lett. **21**(3), 179–181 (2009).
11. Q. Yu, Z. Pan, L.-S. Yan, and A. E. Willner, "Chromatic dispersion monitoring technique using sideband optical filtering and clock phase-shift detection," J. Lightwave Technol. **20**(12), 2267–2271 (2002).
12. Z. Pan, Y. Xie, S. A. Havstad, Q. Yu, A. E. Willner, V. Grubsky, D. S. Starodubov, and J. Feinberg, "Real-time group-velocity dispersion monitoring and automated compensation without modifications of the transmitter," Opt. Commun. **230**(1–3), 145–149 (2004).
13. Y. K. Lize, L. Christen, J.-Y. Yang, P. Saghari, S. Nuccio, A. E. Willner, and R. Kashyap, "Independent and simultaneous monitoring of chromatic and polarization-mode dispersion in OOK and DPSK transmission," IEEE Photon. Technol. Lett. **19**(1), 3–5 (2007).
14. G. Fuller, and D. Tarwater, *Analytic Geometry*, 7th ed., Addison-Wesley, 1992.

#138530 - $15.00 USD Received 24 Nov 2010; revised 24 Dec 2010; accepted 24 Dec 2010; published 7 Jan 2011

15. VPIsystems™, "VPltransmissionMaker™".

## 1. Introduction

Future dynamic optical networks will offer increased flexibility and utilization of overall transmission capacity. Optical performance monitoring (OPM) is an indispensable tool for the efficient operation and management of such dynamic optical networks [1]. Chromatic dispersion is a major transmission impairment affecting the overall performance of high-speed fiber-optic networks and hence must be effectively compensated. Particularly, in dynamic networks CD compensations need to be adaptive in nature since each individual wavelength-division-multiplexed (WDM) channel may accumulate different amounts of CD by traversing different lengths of fibers due to network reconfigurablity enabled by optical add-drop multiplexers (OADM) [2]. In addition, CD is also subjected to change with temperature and other physical effects [3]. Therefore, it is imperative to have an efficient in-line CD monitoring technique which could provide essential information for adaptive CD compensation.

Several classes of techniques have been proposed in recent years that are capable of monitoring in-line CD for dynamic optical networks [4]. Unfortunately, most of these techniques are data rate and modulation format dependent. Since the envisaged future optical networks will probably incorporate multiple modulation formats as well as different data rates, there is a considerable interest in the development of monitoring techniques which could accommodate mixed modulation formats at different data rates. Such beneficial feature may significantly reduce the monitoring costs. These requirements have led to a considerable interest in the OPM techniques utilizing statistical properties of the received signal [5]. Two types of techniques, namely asynchronous amplitude histograms (AAH) and asynchronous delay-tap sampling (DTS), are especially popular in this context. Using the technique of AAH, Kozicki *et al*. [6] and Li *et al*. [7] have successfully demonstrated CD monitoring in phase-modulated systems. Although, AAH based-techniques have shown the potential for CD monitoring in several modulation formats and at different data rates, the results are significantly affected by OSNR changes as well as PMD effects [6]. Another inherent practical problem in dealing with AAH is that the distributions for different signal amplitudes are severely overlapped due to the absence of timing information in asynchronous sampling. Therefore, the separation of individual distributions for parameters extraction is a challenging task. The situation becomes even more complex in case of DQPSK and higher-order modulation formats. Since the signal amplitude in the overlapped region of the pulses (due to pulse spreading caused by CD) will split into multiple levels (due to constructive and destructive interferences depending upon the phases of the adjacent pulses), it will give rise to more peaks in the overall amplitude histogram of the signal and make distributions separation even more difficult. Asynchronous DTS by providing the distributions of signal amplitude slopes instead of signal amplitude itself (i.e. in case of AAH) substantially reduces distributions overlap problems [8]. However, the CD monitoring results are still degraded by both OSNR variations and PMD effects [9,10]. Another major disadvantage of asynchronous DTS is that the delay value between the taps is a function of symbol rate and hence needs to be precisely adjusted for various data rates. This would require a high precision tunable electrical delay line with large tuning range depending upon the range of data rates being monitored. It has been shown in [9] that a slight mis-adjustment in the tap-delay value may lead to very large monitoring errors. On the other hand, Yu *et al*. [11] proposed a CD monitoring technique by detecting the relative group delay between the upper and lower VSB signals (induced by CD) through clock recovery and phase-sensitive detection. Nonetheless, clock recovery is complicated and data rate dependent. Consequently, it is not suitable for CD monitoring in networks with multiple data rates.

In this contribution, we propose a simple CD monitoring technique that combines several advantageous features of the aforementioned techniques while avoiding their drawbacks. This technique estimates the relative group delay between the two VSB signals by measuring the differences in the sampled amplitude levels of two sideband signals which are sampled

#138530 - $15.00 USD Received 24 Nov 2010; revised 24 Dec 2010; accepted 24 Dec 2010; published 7 Jan 2011
(C) 2011 OSA

simultaneously but asynchronously. Since the information is obtained from the signals amplitudes without the need for clock recovery, this technique can work at various data rates and is also applicable to multiple RZ modulation formats such as on-off keying (OOK), differential phase-shift keying (DPSK) and differential quadrature phase-shift keying (DQPSK). Unlike methods using AAH and DTS, the averaging of results at various pulse locations in the proposed technique allows the cancellation of noise effects, making it less prone to OSNR changes. Furthermore, in contrast with AAH based-techniques, no separation of overlapped distributions for parameters extraction is needed, which is often quite challenging and may contribute to monitoring inaccuracies. In terms of implementation complexity, the proposed scheme also offers certain advantages. (1) Unlike DTS based-techniques, no adjustment of tap-delay is needed, thus enabling the use of same hardware for multiple data rates; (2) Unlike [11], our technique does not require sophisticated and expensive clock recovery. The CD monitoring ranges of our proposed technique for 10/12.5/20 Gsym/s RZ-OOK, RZ-DPSK and RZ-DQPSK systems are comparable with the techniques presented elsewhere in the literature [6,7,9,10,12,13] with good monitoring sensitivities.

## 2. Operating principle

The operating principle of proposed CD monitoring technique is shown in Figs. 1 and 2. Since the two sidebands of the modulated optical signal (carrying the same data information) occupy different wavelength ranges as shown in Fig. 1(a), there will be a relative group delay due to CD between the two sideband signals. Hence, if two filters with their centre frequencies $\pm \Delta f$ from the carrier frequency $f_c$ are used to filter out the two sidebands as shown in Fig. 2, the resulting signals after photodetection will have a relative delay $\tau$ with respect to each other as shown in Fig. 1(b) [11]. In our proposed technique, the two sideband signals are sampled simultaneously and due to the relative delay between the VSB signals, the sampled signal amplitudes ($x_i$, $y_i$) will be different in general as shown in Fig. 1(b). Since the two signals amplitudes are sampled asynchronously, the sampling time $T_{sampling}$ between the two sample pairs is not necessarily related to the symbol period $T_{symbol}$ and can be much larger. Now, if the sample pairs ($x_i$, $y_i$) are plotted against each other it will result in a scatter plot shown in Fig. 1(c)–1(f). In the absence of CD, $\tau = 0$ and therefore same signals amplitudes will be sampled and hence the sample pairs ($x_i$, $y_i$) will be located along the diagonal $D$ as shown in Fig. 1(c). However, in the presence of CD, $\tau \neq 0$ and $x_i \neq y_i$ in general. Consequently, the sample pairs ($x_i$, $y_i$) will deviate away from the diagonal $D$ and the amount of deviation is related to the CD of the link as shown in Fig. 1(d)–1(f). To monitor CD from the scatter plot, we can calculate the shortest distance $d_i$ of the sample pair ($x_i$, $y_i$) to the diagonal $D$ which is given by [14]

$$d_i\left(x_i, y_i\right) = \frac{1}{\sqrt{2}}\left|x_i - y_i\right|. \tag{1}$$

We can then define a parameter $F_{CD}$ which is the mean distance of all sample pairs from the diagonal $D$, i.e.

$$F_{CD} = \frac{1}{N}\sum_{i=1}^{N} d_i\left(x_i, y_i\right) \tag{2}$$

where $N$ is the total number of sample pairs. The parameter $F_{CD}$ has a one-to-one relationship with CD i.e. it changes monotonically with a change in accumulated CD of the link. Therefore, we can measure and calibrate $F_{CD}$ against accumulated CD and this relationship can then be exploited for effective CD monitoring. As noise from optical amplifiers can also affect the signals amplitudes, the sample pairs may deviate away from their actual location. The calculation of mean distance $F_{CD}$ helps in averaging out the deviations caused by the amplifier noise.

#138530 - $15.00 USD Received 24 Nov 2010; revised 24 Dec 2010; accepted 24 Dec 2010; published 7 Jan 2011
(C) 2011 OSA

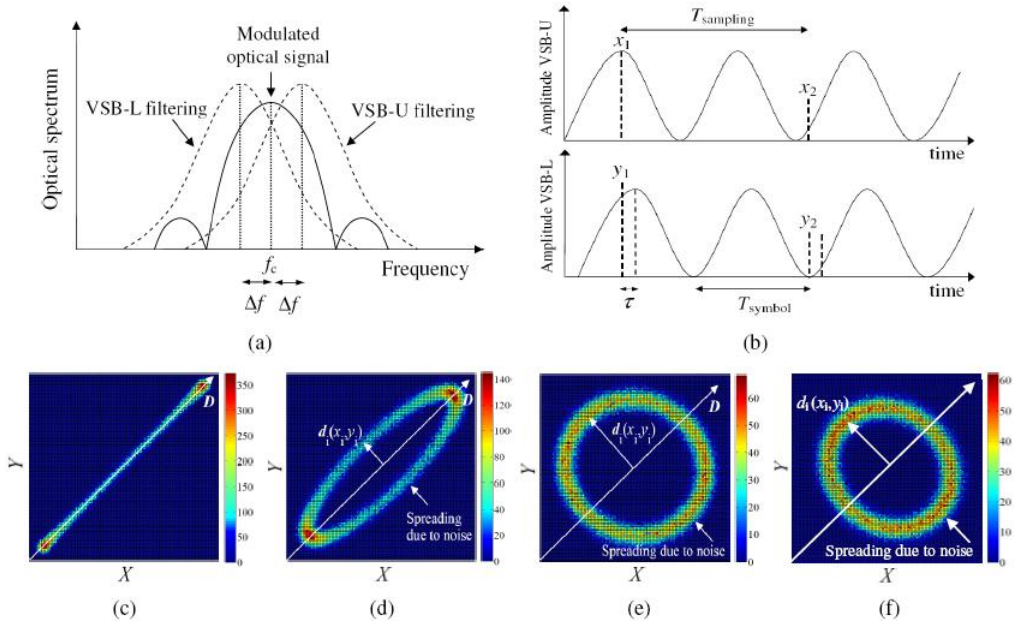


Fig. 1. (a) Upper and lower VSB filtering and (b) relative group delay between the two sideband signals after photodetection. Plot of sample pairs ($x_i$, $y_i$) for a 10 Gbps RZ-DPSK signal with (c) CD = 0 ps/nm; (d) CD = 200 ps/nm; (e) CD = 500 ps/nm and (f) CD = 530 ps/nm. The colour bars show the number of occurrences of sample pairs.

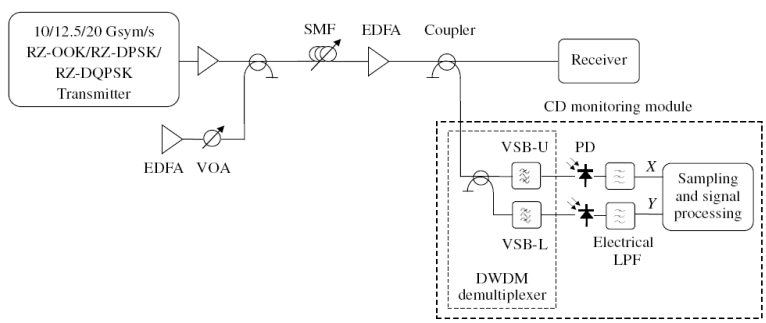


Fig. 2. Experimental and simulation setup for CD monitoring using sideband optical filtering and subsequent asynchronous amplitude sampling for 10/12.5/20 Gsym/s RZ-OOK, RZ-DPSK and RZ-DQPSK systems.

## 3. Experimental setup and results

Experiments and numerical simulations are performed to demonstrate the validity of the proposed monitoring technique. The experimental setup for the proposed monitoring technique is shown in Fig. 2. The 10/12.5 Gbps RZ-OOK and RZ-DPSK signals with 50% duty cycles are generated and transmitted over a single mode fiber (SMF). An Erbium-doped fiber amplifier (EDFA) is used to add ASE noise to the signal and a variable optical attenuator (VOA) is used to change the OSNR in the range between 20 and 40 dB (0.1 nm noise bandwidth) in order to investigate the OSNR dependency of the proposed technique. The accumulated CD of the link is varied in small steps from 0 ps/nm to + 600 ps/nm by using a CD emulator (comprising of different lengths of fibers). At the monitor a coupler is used to tap part of the optical signal for monitoring. In our experiments, we used a fixed power level (–6 dBm) for monitoring. A DWDM demultiplexer with a channel spacing of 100 GHz and a 3 dB bandwidth of approximately 88 GHz for each channel is used to filter out the two VSB

#138530 - $15.00 USD Received 24 Nov 2010; revised 24 Dec 2010; accepted 24 Dec 2010; published 7 Jan 2011
(C) 2011 OSA

signals. The use of demultiplexer channels as filters ensures symmetrical transfer functions for the two sideband filters. Alternatively, a 3 dB coupler and two identical tunable optical filters can also be used to realize VSB filtering. The signal carrier frequency is located at equal frequency differences from the centre frequencies of the two demultiplexer channels. The transfer functions of the two demultiplexer channels and the spectra of the resulting VSB signals are shown in Fig. 3(a), 3(b), and 3(c) respectively. The two VSB signals are then detected independently using two photodetectors. The two sideband signals having a relative delay (as shown in Fig. 3(d) and 3(e)) are then simultaneously and asynchronously sampled to collect 100,000 sample pairs which are then used to calibrate $F_{CD}$ for CD monitoring.

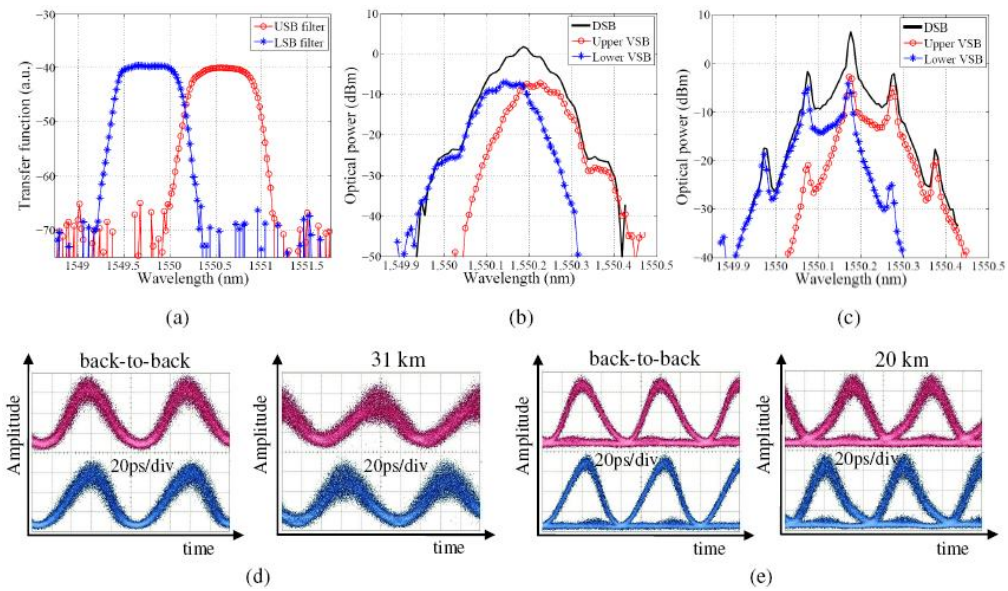


Fig. 3. (a) Measured transfer functions of two demultiplexer channels used for VSB filtering. Optical spectra of received and two VSB-filtered signals for (b) 10 Gbps RZ-DPSK and (c) 12.5 Gbps RZ-OOK systems. CD induced shift for upper and lower VSB signals for (d) 10 Gbps RZ-DPSK and (e) 12.5 Gbps RZ-OOK systems.

Experimental and simulation results for the proposed monitoring technique are shown in Fig. 4. For 10 Gsym/s, it is clear from Fig. 4(a) and 4(b) that $F_{CD}$ is sensitive to accumulated CD in the range of 0 to + 600 ps/nm (0 to + 565 ps/nm), 0 to + 525 ps/nm (0 to + 500 ps/nm) and 0 to + 550 ps/nm for RZ-OOK, RZ-DPSK and RZ-DQPSK systems respectively where the numbers in the brackets indicate the ranges observed in experiments. The small discrepancies between the simulation and experimental results are contributed by several undesirable factors such as non-identical response of the two photodetectors and the drift in carrier frequency with time. From our experimental observations, the frequency drift in the range of a few GHz does not cause serious monitoring inaccuracies especially at higher data rates. Some of these factors have been appropriately addressed in the post-processing for e.g. the amplitudes of the two sideband signals are equalized by measuring the non-identical responsivities of the respective photodetectors. To demonstrate the applicability of the proposed technique to different data rates, results for 12.5 Gsym/s RZ-OOK and RZ-DPSK signals are shown in Figure 4(c) and 4(d) which demonstrate a monitoring range of 0 to + 375 ps/nm (0 to + 335 ps/nm) and 0 to + 325 ps/nm (0 to + 315 ps/nm) for RZ-OOK and RZ-DPSK systems respectively. The decrease in monitoring range with an increase in symbol rate is attributed to the decrease in symbol period of the signal. Finally, due to hardware limitation, the validity of the proposed monitoring technique for 20 Gsym/s RZ-OOK, RZ-DPSK and RZ-DQPSK systems is demonstrated through numerical simulations using commercial software Virtual Photonics Inc. (VPI) [15]. A monitoring range of 0 to + 175 ps/nm, 0 to +

#138530 - $15.00 USD Received 24 Nov 2010; revised 24 Dec 2010; accepted 24 Dec 2010; published 7 Jan 2011
(C) 2011 OSA

140 ps/nm and 0 to + 130 ps/nm is obtained for RZ-OOK, RZ-DQPSK and RZ-DPSK systems respectively as shown in Fig. 4(e). It may also be noticed from Fig. 4 that $F_{CD}$ changes quasi-linearly with accumulated CD over most of the monitoring range and the saturation mainly occurs near the end thus enabling good sensitivity over the measurement range. From the above results, it is evident that the proposed technique is capable of monitoring accumulated CD for multiple modulation formats and different data rates with reasonable monitoring range and sensitivity.

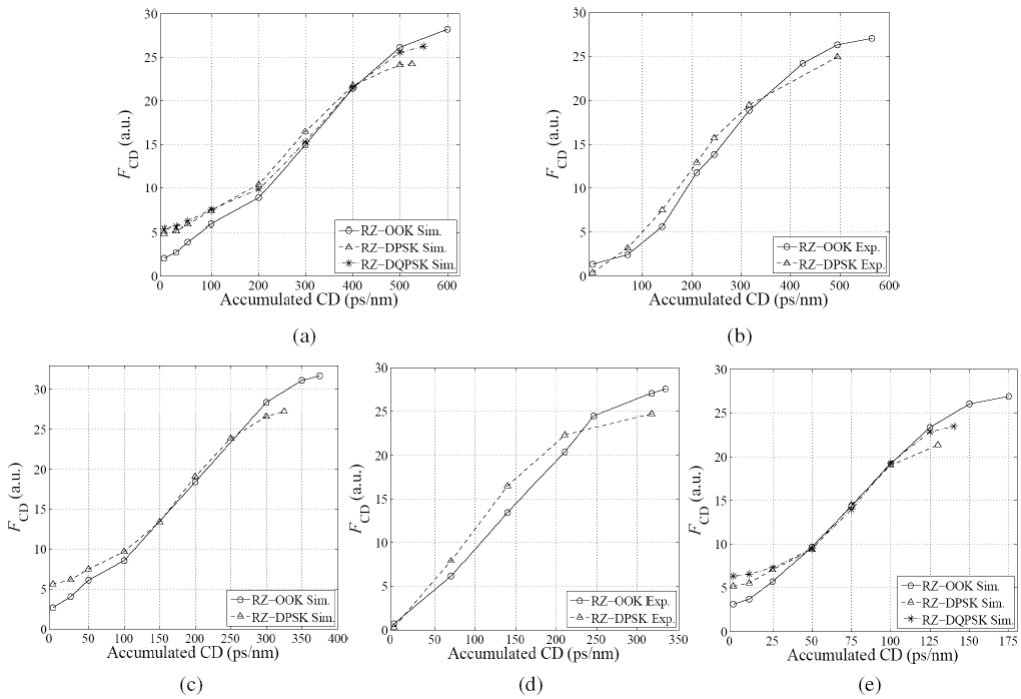


Fig. 4. Dispersion parameter $F_{CD}$ vs. accumulated CD for (a) 10 Gsym/s (simulation) (b) 10 Gsym/s (experimental) (c) 12.5 Gsym/s (simulation) (d) 12.5 Gsym/s (experimental) and (e) 20 Gsym/s (simulation) using various modulation formats.

To analyze the resilience of proposed CD monitoring technique against OSNR variations (due to the averaging of results at various pulse locations), we performed CD monitoring experiments for 10 Gsym/s RZ-OOK and RZ-DPSK systems for OSNR values in the range of 20–40 dB (0.1 nm noise bandwidth). The results are demonstrated in Fig. 5 which clearly show that $F_{CD}$ is not perturbed by the OSNR variations. Thus, the calculation of mean distance $F_{CD}$ using (2) effectively averages out the noise contributions as anticipated. Note that the CD monitoring using AAH as well as DTS in conjunction with Hough transform exhibit OSNR dependencies [6,9,10]. Therefore, the proposed technique certainly offers advantage in this regard.

Finally we investigated the PMD dependence of proposed technique through numerical simulations for 20/40 Gbps RZ-DQPSK systems. The results are shown in Fig. 6. It is clear from the figure that the CD estimation errors remain relatively small for DGD values till 10 ps and 5 ps for 20 Gbps and 40 Gbps RZ-DQPSK systems respectively while they start increasing afterwards. This is due to the fact that PMD causes deterioration of the pulse shape

#138530 - $15.00 USD Received 24 Nov 2010; revised 24 Dec 2010; accepted 24 Dec 2010; published 7 Jan 2011
(C) 2011 OSA

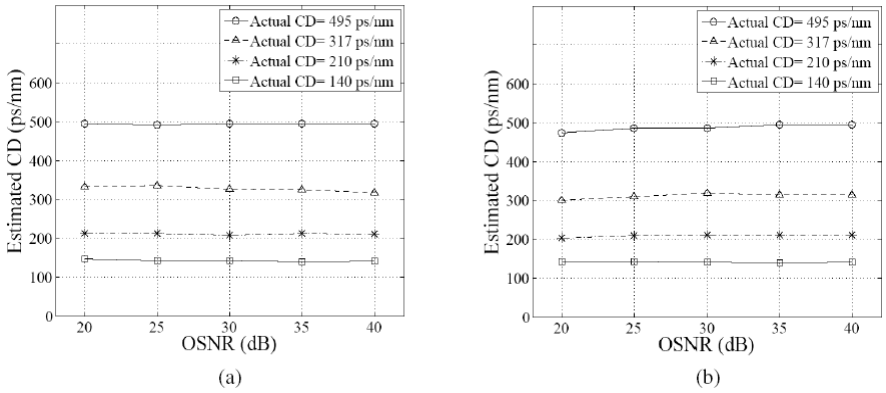


Fig. 5. Effect of OSNR variations on the CD monitoring for 10 Gsym/s (a) RZ-DPSK and (b) RZ-OOK systems. The noise resolution bandwidth is 0.1 nm.

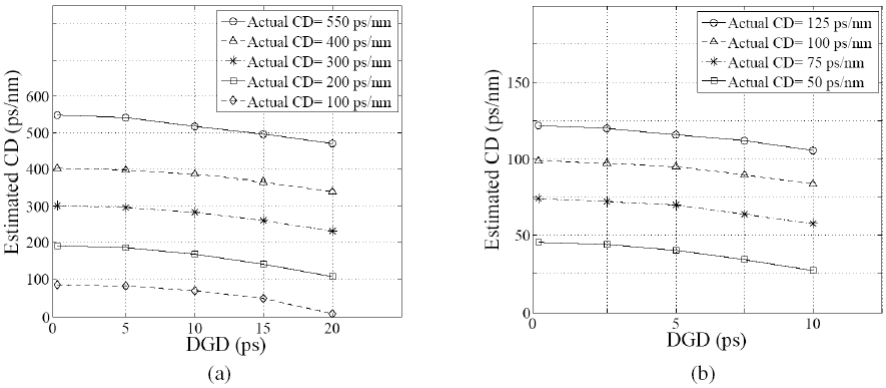


Fig. 6. Effect of DGD on the CD monitoring for (a) 20 Gbps and (b) 40 Gbps RZ-DQPSK systems.

for both sideband signals resulting in variation of $F_{CD}$ with DGD. Dependencies on PMD have also been reported in AAH and DTS based CD monitoring techniques [6,9]. Considering typical PMD coefficient value of 0.1 ps/km$^{1/2}$, DGD tolerances of 10 ps and 5 ps reflected through our simulations for 20 Gbps and 40 Gbps systems translate into fiber lengths of $10\text{x}10^3$ km and $2.5\text{x}10^3$ km respectively, which are above typical link lengths for reliable data transmission at such data rates. Therefore, we believe that for typical optical networks lengths the performance of proposed monitoring technique will not be significantly affected by PMD.

## 4. Discussion

The comparison of proposed technique with some of the existing CD monitoring techniques is summarized in Table 1. Like the methods using AAH and DTS, the proposed technique successfully demonstrates CD monitoring for various modulation formats at different data rates, without requiring any hardware modification. Such cost-effective feature is not exhibited by the technique utilizing sideband filtering with clock phase-shift detection because the clock recovery circuitry is data rate dependent, expensive and complicated. On the other hand, the tap-delay in DTS based-techniques needs very precise adjustment. The tuning range of tap-delay must also be quite large depending upon the range of data rates being monitored thus adding to the hardware complexity. Our technique avoids this complexity at the cost of an additional asynchronous amplitude sampling port which is data rate as well as modulation format independent. Despite being simple in nature, our technique outperforms AAH and DTS based schemes in decoupling the effect of OSNR. The introduction of averaging feature

#138530 - $15.00 USD Received 24 Nov 2010; revised 24 Dec 2010; accepted 24 Dec 2010; published 7 Jan 2011
(C) 2011 OSA

helps in getting rid of deleterious noise effects thus making CD monitoring resilient to OSNR changes. The processing of samples from two VSB signals for the calculation of $F_{CD}$ is alsoquite straight forward as it does not rely on extracting parameters from the overlapped distributions unlike methods using AAH. Finally, the samples acquired at the two asynchronous sampling ports in our technique may also potentially be exploited for simultaneous monitoring of other impairments for e.g. OSNR, like in AAH and DTS based-techniques. An additional advantage in this case is that the amplitude samples are acquired in parallel at the two ports which may halve the data acquisition time and henceforth reduce monitoring time. The monitoring ranges demonstrated by the proposed technique are comparable with most of the existing methods. Techniques based on AAH [6,7], DTS [9,10] and clock-tone based methods [12,13] typically exhibit monitoring ranges of 0 to + 600 ps/nm for 10 Gsym/s signals. The technique based on clock recovery and phase-shift detection [11] demonstrates a broader measurement range of ± 70 ps/nm for 40 Gsym/s RZ signal (considering the square dependence of CD on symbol rate, this corresponds to a monitoring range of ± 1120 ps/nm for 10 Gsym/s systems). The monitoring range of the proposed technique can potentially be extended by introducing dispersion offset fibers inside the CD monitoring module. Measuring the dispersion parameters $F_{CD}$ for the individual branches (incorporating different amounts of dispersion offsets) and by defining appropriate mapping rules, the range can be broadened. Since the proposed technique relies on the detection of optical signal intensity and lacks any phase information, the monitoring curves are expected to be symmetrical for positive and negative dispersions as in the methods using AAH and DTS. If the information about the dispersion sign is needed then this can be obtained by introducing an offset fiber of known CD in the monitoring module. Determining the corresponding increase or decrease in the dispersion parameter $F_{CD}$ will directly provide information about the sign of accumulated CD being monitored. Finally, the nonlinear effects in long-haul fiber-optic transmission systems may also slightly affect the performance of the proposed technique especially for low accumulated CD values.

## 5. Conclusions

In this paper, we proposed and experimentally demonstrated a simple and cost-effective technique for CD monitoring in 10/12.5/20 Gsym/s RZ amplitude and phase-modulated systems through asynchronous sampling and subsequent processing of two VSB signals. This technique enables CD monitoring for several RZ modulation formats at different data rates with good monitoring ranges and sensitivities with simple hardware and signal processing. The OSNR dependence of CD monitoring is minimized through averaging of results at various pulse locations and the DGD tolerances of the proposed monitoring technique are also investigated.

#138530 - $15.00 USD Received 24 Nov 2010; revised 24 Dec 2010; accepted 24 Dec 2010; published 7 Jan 2011
(C) 2011 OSA

**Table 1. Comparison of proposed technique with other CD monitoring techniques**

| Technique | Monitoring of multiple data rates and modulation formats | Implementation complexity | Dependency on other parameters | Potential for multi-impairment monitoring |
|---|---|---|---|---|
| Sideband filtering and asynchronous amplitude sampling | Yes | Low (No clock recovery, tap-delay adjustment needed) | Resilient to OSNR effects but PMD dependent | Yes (Amplitude samples may also be used for OSNR monitoring) |
| Sideband filtering and clock phase-shift detection [11] | No (Clock recovery circuitry is data rate dependent) | High (Clock recovery circuitry is complicated) | Independent of OSNR and PMD | No (Can monitor only CD) |
| Asynchronous amplitude histograms based techniques [6,7] | Yes | Very low (Processing is challenging due to distributions overlap) | OSNR and PMD dependent | Yes (Can monitor OSNR and PMD but not independently) |
| Delay-tap sampling based techniques [8–10] | Yes (Tap-delay value must be adjusted for different data rates) | Medium (Requires precise adjustment of tap-delay which is symbol-rate dependent) | OSNR and PMD dependent | Yes (Can monitor OSNR and PMD but not independently) |

## Acknowledgements

The authors would like to acknowledge the support of the Hong Kong Polytechnic University under project number J-BB9L and the Hong Kong Government General Research Fund under project number PolyU 519910.