Experimental Demonstration of a Fiber-Optic Gas Sensor Network Addressed by FMCW

H. L. Ho, W. Jin, H. B. Yu, K. C. Chan, C. C. Chan, and M. S. Demokan

***Abstract*—We report on the use of frequency-modulated continuous-wave and wavelength modulation spectroscopy techniques for addressing a multipoint gas sensor network. A three-sensor network of ladder topology is experimentally demonstrated for the detection of acetylene gas. A minimum detectable concentration of 270 ppm/$\sqrt{\text{Hz}}$ is obtained with 25-mm gas cells under atmospheric pressure which corresponds to a minimum detectable absorbance of 3.40×10^{-4}. The crosstalk between the sensors is below −22 dB.**

***Index Terms*—Frequency-modulated continuous wave , optical fiber gas sensors, sensor multiplexing, wavelength modulation spectroscopy.**

I. Introduction

OPTICAL fiber gas sensors based on the absorption of light at near-IR wavelengths (1–1.8 μm) have attracted considerable attention over the past decade [1]. The advantages of fiber sensors include their remote detection capability, safety in hazardous environments, and immunity to electromagnetic fields. For economical consideration, sensor multiplexing must be implemented in order to reduce the cost-per-sensing-point where some expensive components can be shared by a number of sensors. Spatial-division multiplexing (SDM) [2] and time-division multiplexing (TDM) techniques [3] have been applied for multiplexing fiber-optic gas sensors. The SDM system is of similar performance to a single-sensor system but a number of receivers need to be used. The TDM system uses a single source and receiver unit and is thus potentially of a lower cost. But the pulsing of light from the laser source in the TDM system does not make a good usage of the laser power and would result in poor signal-to-noise ratio (SNR) if a number of sensors were multiplexed. In addition, the limited extinction ratio of the optical switch used in the TDM system will result in crosstalk and affect system performance. In this letter, we report on the use of frequency-modulated continuous-wave (FMCW) technique for multiplexing fiber-optic gas sensors. This technique was first proposed for radar ranging systems [4] and, more recently, was used in fiber-optic sensors [5] and a fiber grating sensor system [6]. We here report the results of the first experimental demonstration of a sensitive multipoint gas detection system by using a combination of FMCW and wavelength-modulation spectroscopy (WMS) [7].

Manuscript received May 19, 2000; revised August 10, 2000. This work was supported by Hong Kong PolyU under Grant G-V591 and the Hong Kong SAR Government under CERG Grant PolyU5081/98E.

The authors are with the Department of Electrical Engineering, The Hong Kong Polytechnic University, Kowloon, Hong Kong (e-mail: eehlho@ee.polyu.edu.hk).

Publisher Item Identifier S 1041-1135(00)09562-8.

The sensor network considered here consists of N transmission-type gas sensors ($N = 3$ in Fig. 1) connected in a forward-coupled ladder topology [3]. Light from a New Focus external cavity tunable laser was modulated in intensity by use of a UTP single-polarization intensity modulator on which a triangular swept-frequency carrier generated from a voltage-controlled oscillator (VCO) was applied. The sweep rate (f_s) and the frequency deviation (Δf) of the carrier were 10 kHz and 6.3 MHz, respectively. A polarization controller was used before the intensity modulator for optimizing the launched power. The splitting ratios of the couplers C_1, C_2 were chosen to be 66 : 33 and 50 : 50, respectively, in order to balance the power level from each sensor [3]. When light passes through the gas cells, gas concentration information is encoded on to the light intensity. The return light signals from different sensors are coupled into a common output fiber and then converted to an electric signal by a high-speed photodetector and mixed with a reference signal from the VCO subsequently. The output from the mixer consists of N-beat notes (here, $N = 3$) with their respective beat frequencies ($f_{\text{beat},\,i}$) determined by the time delay differences (τ_i, $i = 1, 2, 3$, corresponding to the three sensors) between the sensor signals and the reference as [6]

$$f_{\text{beat},\,i} = 2\Delta f \cdot f_s \tau_i. \tag{1}$$

In our system, the optical path differences between the sensing channels and the electric delay of the reference were adjusted in order to make the beat frequencies coinciding with integer multiples k of the sweep rate (so, $f_{\text{beat},\,i} = kf_s$). Under such conditions, the beat note spectra of the three sensors with $k = 2, 4,$ and 5 are approximately of single-line spectra [6] with their beat frequencies corresponding to 20, 40, and 50 kHz, respectively. The corresponding values of τ_i are 158.7, 317.4, and 396.8 ns, respectively. The length of the delay lines between S_1 and S_2, S_2 and S_3 are approximately 32 and 16 m.

To apply the WMS technique to the gas sensor network, the wavelength of the laser is modulated sinusoidally at $f_m = 400$ Hz while it is scanned slowly (at about 0.06-Hz repetition rate) across an gas absorption line of acetylene around 1530.2 nm. The second harmonic ($2f_m$) signal that is proportional to gas concentration is detected by using a lock-in amplifier. The $2f_m$ signal was maximized when the laser wavelength was aligned to the center of the gas absorption line and when the wavelength modulation signal was set to a magnitude of 0.85 V_{rms}. This modulation voltage corresponds to a modulation index of about 22 GHz that is 2.2 times the linewidth of the absorption line [2], [3].

The spectrum of the signal from the mixer was found dependent on the amplitude of the wavelength modulation applied.

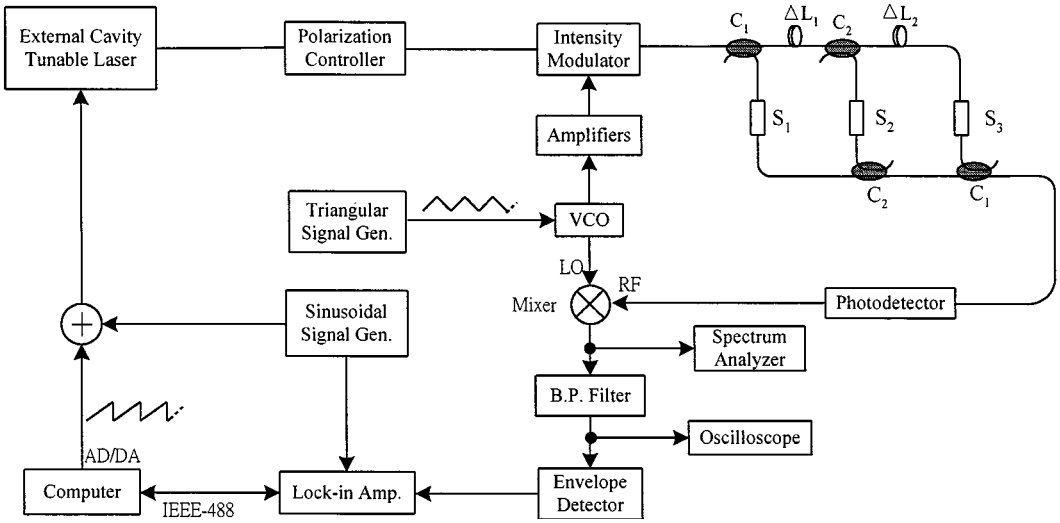

Fig. 1 FMCW addressed fiber-optic gas sensor network.

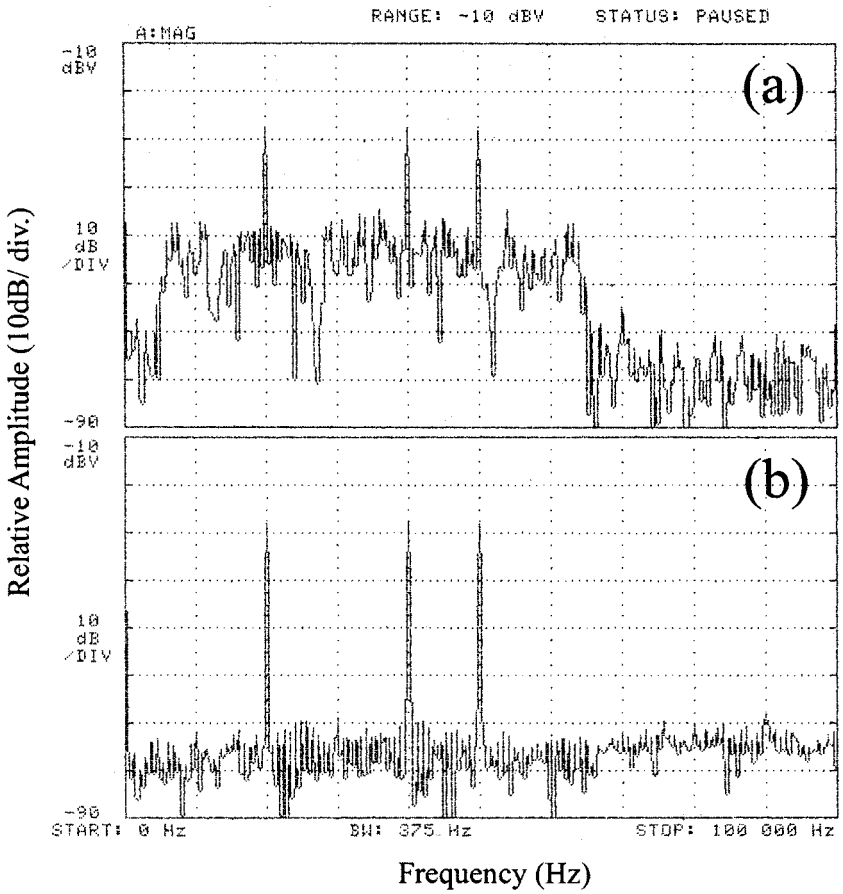

Fig. 2. Spectrum of signal from the mixer: (a) small modulation amplitude and (b) large modulation amplitude.

The SNR around the beat frequencies was improved from about 20 dB to better than 45 dB (with a bandwidth of 375 Hz) when the modulation amplitude was varied from 120 MHz to 22 GHz. Fig. 2 shows two examples of spectrum analyzer displays when the modulation amplitude was about 120 MHz and 22 GHz, respectively, and when no gas was applied to the gas cells. The poor SNR at low modulation amplitude was due to coherent interference between the signals from different sensor channels. The coherence length of the tunable laser is on the order of a kilometer, and the coherent interferometric effect would definitely exist in our system and affect the performance of the sensor network. The use of large modulation amplitude shifts the (unwanted) interferometric signals to higher frequency band (beyond 100 kHz in Fig. 2) and thus results in better SNR around the beat frequencies.

Although, ideally, the spectrum of the beat-note for a particular sensor is approaching a single line at the beat frequency, there are however sidelines associated with FMCW technique

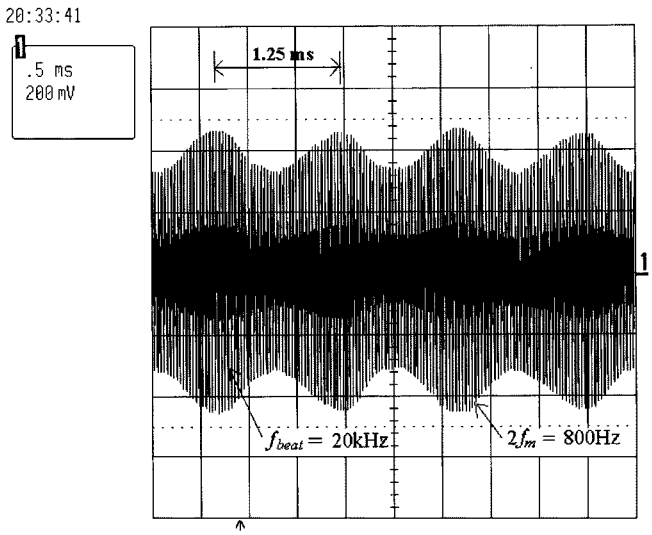

Fig. 3. Time-domain signal of sensor #1 before envelope detection.

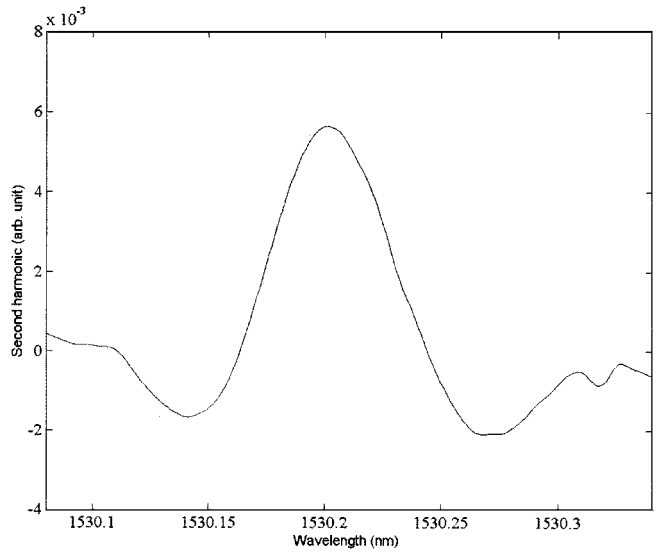

Fig. 4. Second harmonic output of sensor #1 when gas cell #1 was filled with 9415-ppm acetylene gas.

[4], [6]. The overlapping of these sidelines and the beat frequencies would cause crosstalk between sensors. The magnitude of the sidelines (and thus crosstalk) was evaluated by blocking the light signal from say S_1 and looking at the signal magnitude at 20 kHz when one of the other gas cells (#2 and #3) was blocked. The crosstalk in terms of power spectrum amplitude was found to be about -42 dB from S_2 to S_1 and -60 dB from S_3 to S_1.

A bandpass filter was employed to separate a selected beat frequency from the whole spectrum for extracting information from a selected sensor. The $2f_m$ signal and hence the gas concentration information is carried by the envelope of the associated beat frequencies. Fig. 3 shows an oscilloscope display of the signal from a bandpass filter centered at 20 kHz (corresponding to sensor #1) when gas cell #1 was filled with acetylene gas of 50% concentration and the laser wavelength was tuned to the center of the gas absorption line. The envelope of the selected beat signal was then restored by use of an envelope detector and lock-in detected with the lock-in amplifier, which is connected to a personal computer through the IEEE-488 interface for data acquisition.

The sensitivity of the system was determined by filling gas cell #1 with 9415-ppm acetylene gas. With a wavelength modulation amplitude of about 22 GHz, the $2f_m$ signal obtained with the lock-in amplifier is shown in Fig. 4. The SNR was estimated to be about 20 and the minimum detectable concentration was calculated to be 270 ppm/$\sqrt{\text{Hz}}$ for the 25-mm gas cell or 6.75 ppm $\cdot$ m, which corresponds to a minimum detectable absorbance of 3.40×10^{-4}. This detection sensitivity is similar to that measured from a single sensor (sensor #1) where the light signals from the other two channels were completely blocked, indicating that the system performance is not limited by the interferometric signals due to coherent mixing between the lightwaves from different sensor channels [3] and is believed to be limited by the residual etalon interference effect from the gas cells [2].

The crosstalk performance of the system was evaluated by repeatedly measuring the second harmonic signals when the gas cells #1, #2, and #3 were filled by the following combination of gas concentrations: (1%, 0%, 0%), (1%, 100%, 0%), and (1%, 0%, 100%). The crosstalk from S_2 to S_1 and from S_3 to S_1 were found to be about -22 and -31 dB. This corresponds to crosstalk levels of -44 and -62 dB, respectively, in terms of signal power that agrees well with the measured results of the sideline amplitudes of the FMCW.

In conclusion, we have investigated the use of FMCW coupled with WMS for addressing a multipoint gas sensor network. The unwanted interferometric signals due to coherent mixing between signals from different channels were found reduced significantly by using proper wavelength modulation coupled with slow wavelength scanning and lock-in detection. A three-sensor network was experimentally demonstrated with a minimum detectable absorbance of 3.40×10^{-4} and crosstalk between the sensors of better than -22 dB. High sensitivity multipoint gas detection of up to a few tens of sensors may be achieved by using FMCW [6] and WMS techniques.

REFERENCES

[1] G. Stewart, *Fiber Optic Sensors, Sensor Systems for Environmental Monitoring, Vol. 1: Sensor Technologies*, M. Campbell, Ed. London, U.K.: Chapman & Hall, 1997, ch. 1, pp. 1–40.

[2] G. Stewart, C. Tandy, D. Moodie, M. A. Morante, and F. Dong, "Design of a fiber optic multi-point sensor for gas detection," *Sens. Actuators B, Chem.*, vol. 51, pp. 227–232, 1998.

[3] W. Jin, "Performance analysis of a time-division-multiplexed fiber optic gas sensor array using wavelength modulation of the DFB laser," *Appl. Opt.*, vol. 38, no. 25, pp. 5290–5297, 1999.

[4] A. J. Hymans and J. Lait, "Analysis of a frequency-modulated continuous-wave ranging system," *Proc. Inst. Elect. Eng.*, vol. 107B, pp. 365–372, 1960.

[5] R. Kist, "Point sensor multiplexing principles," in *Optical Fiber Sensors: Systems and Applications*, B. Culshaw, J. P. Dakin, and M. Campbell, Eds. London, U.K.: Artech House, 1989, vol. 2, ch. 14, pp. 511–574.

[6] P. K. C. Chan, W. Jin, J. M. Gong, and M. S. Demokan, "Multiplexing of fiber bragg grating sensors using an FMCW technique," *IEEE Photon. Technol. Lett.*, vol. 11, pp. 1470–1472, Nov. 1999.

[7] J. Reid and Labric, "Second-harmonic detection with tunable diode laser-comparison of experiment and theory," *Appl. Phys. B*, vol. 26, pp. 203–210, 1981.