Application of ASK Modulation for DC/DC Converters Control in DC Distribution Power System

T.K.Cheung, K.W.E.Cheng, D.Sutanto Y.S.Lee and Y.L.Ho

Department of Electrical Engineering , The Hong Kong Polytechnic University, Hong Kong.
eetkcheu@Polyu.edu.hk eeecheng@polyu.edu.hk eesutant@Polyu.edu.hk eeyslee@polyu.edu.hk
eeylho@polyu.edu.hk

***Abstract*—A DC micro-grid distribution system is described in this paper. A number of DC/DC converters are connected in parallel in the same power distribution line and a server PC is programmed to generate a carrier in high frequency with modulated signal to regulate each power converter. Experimental results have confirmed that the method can be used to regulate Buck converter successfully and the address and data signals of each converter can be controlled.**

I. INTRODUCTION

AC distribution was a conventional method because the AC transformer can be used to convert voltage easily. With the rapid development of power electronics, DC voltage transformation can now be achieved easily. The efficiency of DC transformation is also very high, around 90 to 97%. Also most of the digital and modern equipment requires DC. These includes

- Motor drives – DC, which is currently obtained from rectification of AC power, drives the inverter.
- Electronic ballast – driven by DC for the resonance circuit of the electronic ballast.
- Audio and video equipment. They require low voltage DC for the audio and video electronics.
- CRTs : require high voltage DC voltage
- Lighting: Besides electronic ballast, the conventional incandescent lamp can also be powered by DC
- PLC: power line communication can be performed easily by DC distribution and the performance is much better than that of AC PLC.

Direct use of direct current has several advantages for distribution networks. DC distribution links can directly supply power to digital devices on customer's site, and connect distributed generation systems to the grid without the need for DC/AC converters.

Distributed generation system may consist of renewable resources such as wind or solar power connected in parallel to a battery energy storage system. The energy storage system allows for increase in service reliability by reducing the spread of disturbances from one customer to another and enables facility of each customer to operate as independently as desired. Also most of the alternative energy such as solar panel, fuel cell and many DC generators produce DC. Therefore using DC distribution is a convenient method for future distribution.

DC cables could also be placed in the same ducts as gas and water pipes because they eliminate the generation of AC induced currents. Potentially DC cables can cost less than ac cables of the same power rating because they need less electrical insulation and experience less resistive losses and no dielectric losses.

Recent literature survey on DC distribution system shows numerous research works have been carried out all over the world in this area. Studies on AC and DC conditioning systems [1], the stability of DC distribution [2], modeling [3], soft-switching breakers [4], fault analysis [5], power electronic building boards [6] and soft-switching [7-8] have been reported. However, few have considered the issues of energy storage and power electronic design optimisation, which is the main aim of this project.

DC distribution has been researched extensively in the DC conversion side which includes application in vehicle, the impedance analysis, voltage regulation and zonal analysis [9-12]. On the other hand, the research using power line communication has been conducted in AC system for utility power lines[13] and local communication [14] in the areas of modelling and hardware implementation. This paper is to describe a DC distribution using power electronics techniques and power line communication. An Amplitude-Shift Keying (ASK) modulation is used for transmitting signals. The technique is then applied to control a number of DC/DC power converters which are connected in the DC distribution lines together.

II. THE DC DISTRIBUTION SYSTEM

A schematic diagram of the DC distribution system under study is shown in Fig 1. The DC power line is powered by an active rectifier from the mains. The communication signal is generated from the host computer which generates communication signal on the line. The signal is distributed along the DC distribution line and all the units connected to the DC power line can receive the signal. The signal is usually modulated by a higher frequency carrier. A demodulator is used to obtain the control signal from the modulated signal. The control signal can then be used to regulate the units connected. The mains DC is filtered and becomes DC for each of the power unit connected to the

line. Each unit has an address. Two items can be obtained from the control signal. They are the address and the control data.

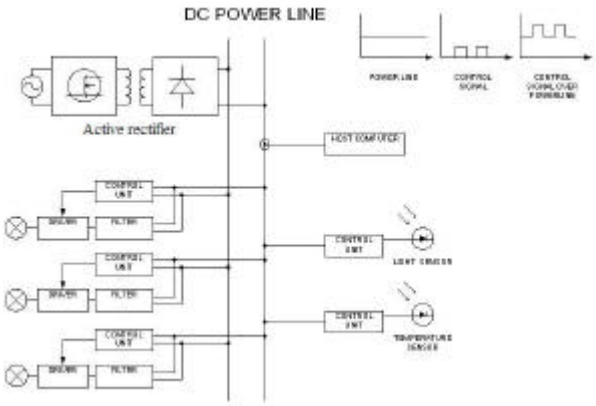

Fig. 1 A schematic diagram of a DC distribution

III. MODULATION

The modulation method is based on the ASK demodulation. Fig 2 shows the diagram in which the modulation signal is added to the line through a pulse transformer.

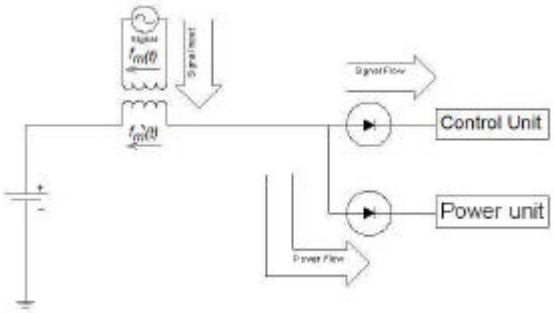

Fig. 3 Modulation circuit diagram

The present modulation method is illustrated in Fig 4. The digital signal f(t) is the data wanted to be transmitted. The carrier signal s(t) is a high frequency sinusoidal wave. Its equation is described as:

$$s(t) = A_s \sin(2pf_c t + j) \quad (1)$$

The ASK modulation is used to transmit the parameters and its modulated signal is:

$$f_m(t) = f(t) A_s \sin(2pf_c t + j) \quad (2)$$

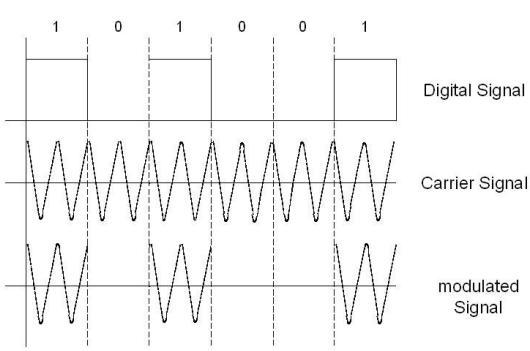

Fig. 4 Illustration of the ASK modulation

The modulated signal is the added in series directly to the DC power line as shown in Fig 2. The power line voltage V_p is

$$V_p(t) = V_{dc} + f_m'(t) = V_{dc} + Nf(t) A_s \sin(2pf_c t + j) \quad (3)$$

where V_{dc} is the DC voltage of the power line, f_m'(t) is the modulated signal after through the pulse transformer and N is the transformer turns ratio of the pulse transformer for the connection from the PC and power line.

IV. DEMODULATION

A. ASK demodulator

The modulated signal is added on the DC power line and is superposed on the DC distributed voltage. It can be de-modulated by a high pass filter circuit. Fig 4 shows the circuit developed. The power line signal is connected to the input. The DC line voltage is blocked by the series capacitor C_{mi} and only ASK modulated signal can be inputted to the demodulator. A comparator is then used to help the demodulation. If the ASK signal is greater than the power line voltage DC level, the output capacitor C_{mo} is charged up to logic "1". If it is less than the level, the capacitor is discharged by the parallel resistor R_{mo}. The two inverter gates are drivers that are used to re-condition the signal of the demodulated signal to digital form for the input to the microprocessor unit (MCU) or personal computer (PC).

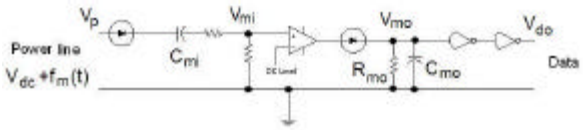

Fig. 4 ASK Demodulator

B. DC Load

The DC load connected to the power line will expose to V_{dc} and $f_m(t)$. A simple LC filter is used to remove the ac component as shown in Fig 5. In order to protect the signal $f_m(t)$ from decoupling by any large decoupling capacitor connected to the DC load, a diode is added in series in the input side of the load.

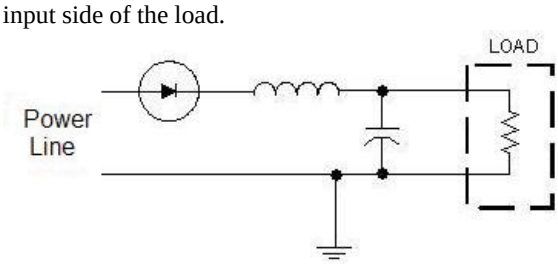

Fig. 5 The DC load

C. Device and host communication

In the DC power line, there are two wires and each are + and 0 for the transfer of the power. The modulated signals are injected to the line in series. The loads are all installed with MCU plus a demodulator. The MCU used in this study is AK89C2051 which has a 26MHz clock. They are all con-

nected commonly to the power line. Therefore no other connection is needed among the host computer, power line and the load. Fig 6 illustrates the connection.

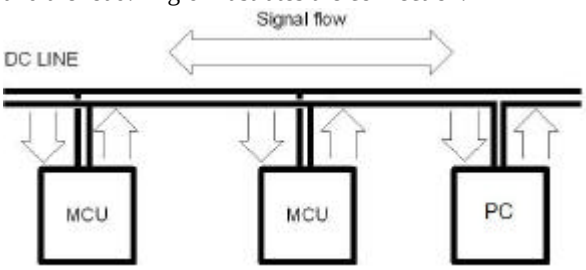

Fig. 6 Load and host PC communication

The MCU and PPC are using Mode 3 port communication method. This method is multi-processors application. One more bit (TB8) is added to the data in order to identify the address and data.

The mechanism of sending data is as follows:

1. The PC or the transmitter sends the address with logic "1" of TB8 to all the receivers and they all setup the SM2 to '1' to listen the address.
2. All the receivers will compare the received address with its address. If they are equal, MCU then clears the SM2 bit to '0' inside the chip in order to start the receive mode.
3. The transmitter sends the data with logic "0" of TB8 to all receivers.
4. Only cleared SM2 of the MCU has a receiving interrupt to receive the data.
5. After receiving the data, the receiver sets up the SM2 again to listen the next address.

V Experiment Setup

A number of DC/DC power converters are connected to the DC power line. Each is allocated with an address. It is attempted to control the output voltage of each DC/DC converter by using a Central Server PC. Fig. 7 shows the Buck converter used in the study.

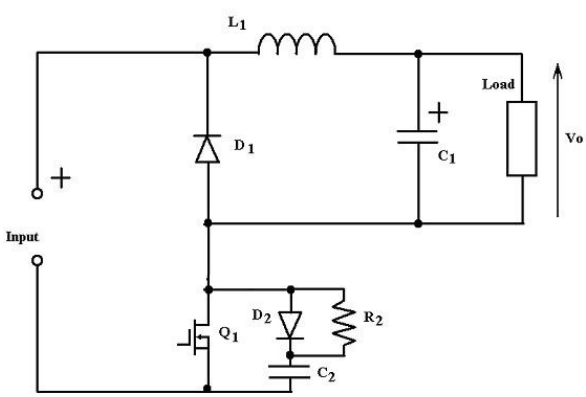

Fig 7. Buck converters used for the DC distribution system

The parameters used are:

L_1=450μH

C_1=100μF

Q_1=IRF540

D_1=UF4001

C_2=5nF

R_2=100Ω

D_2=UF4001

C_2, D_2, and R_2 form the snubber of the Buck converter.

VI. Experimental Results

A. Modulation

The above system has been setup to regulate the DC/DC Buck converters. Fig 8 shows the waveforms around the modulation. In the figure: Channel 1 is Modulated waveform after the filter in the receiver; Channel 2 is the DC line voltage; Channel 3 is serial data and Channel 4 is the waveform of the primary winding of the input waveforms from the modulator of Series PC.

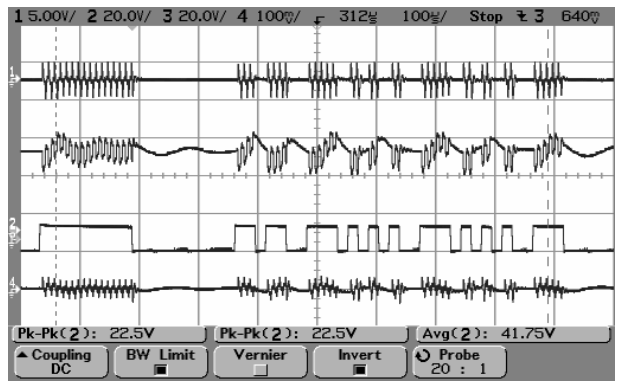

Fig. 8 Modulation waveforms (Chan 1: V_{mi} 5V/div; Chan 2: V_p 20V/div; Chan 3: V_{do} 20V/div; Chan 4: s(t) 100mV/div)

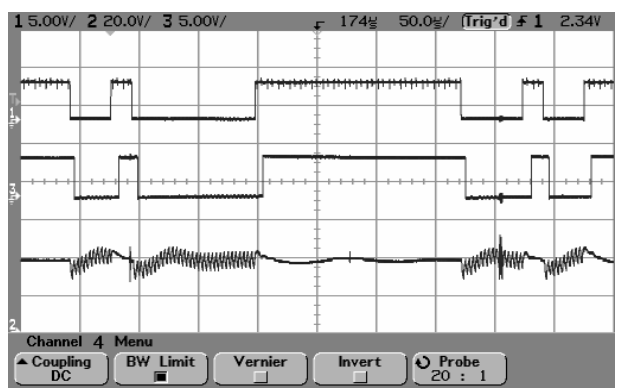

Fig. 9 Signal data (Top: Chan 1 *f*(t); Middle: Chan 3 V_{do} 5V/div; Bottom : Chan 2 V_p 20V/div)

Fig 9 shows the digital data signal *f*(t) before entering the modulator and after demodulation from the modulator, V_{do}. It can be seen that there is very little delay. The power line is a DC voltage with some high frequency ripples which is the carrier.

B. DC converter control

The digital data is used to regulate the duty ratio of the transistor of the Buck converters. The 8 bit data is converted linearly to the duty ratio and therefore the resolution of the duty ratio is 8 bit which is good enough for most application.

For the present study two Buck converters were used for demonstration the method. The waveform of signal from the host PC controls two converters though the DC power line, which is shown in Fig 10. There are 4 bytes transmitted in Channel 1. The first byte is the address of converter 2 and the next byte is the data for the converter 2. The next byte is the address of the converter 1 and the last byte is the data for the converter 1. The duty ratio of PWM outputs of two converters under controlled are shown in Channels 2 and 3 for converters 1 and 2 respectively. After converter 1 receives the data signal and it is converted to duty ratio:

$$D = \frac{V_{do}}{255} \tag{4}$$

in which V_{do} is of 8 bit number. Channels 2 and 4 show the trasistor's duty ratio and converter's output voltage of converter 2. It is clearly that the delay between the signal starts and the output voltage settled-down is around 750µs.

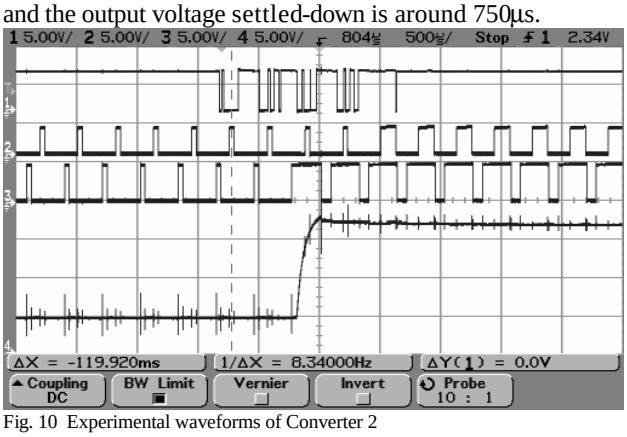

Fig. 10 Experimental waveforms of Converter 2
(Chan 1: *f*(t) 5V/div; Chan 2: Duty ratio of Converter 1 5V/div; Chan 3: Duty ratio of Converter 2 5V/div; Chan 4: Vo of converter 2 5V/div).

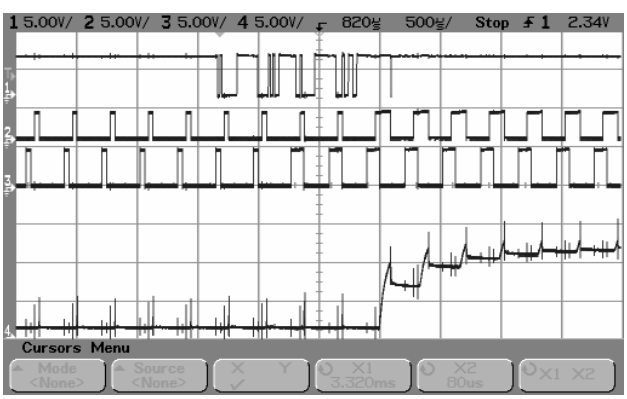

Fig. 11 Experimental waveforms of Converter 1
(Chan 1: f(t) 5V/div; Chan 2: Duty ratio of Converter 1 5V/div; Chan 3: Duty ratio of Converter 2 5V/div; Chan 4: Vo of converter 2 5V/div).

Fig 11 shows the waveforms of the converter 1. The 1st 3 waveforms in Fig 11 are the same as Fig 10. The channel 4 shows the output voltage waveform of Converter 1. It can also be seen the delay is also around 750µs.

VII. Discussion

As the rapid development in the DC converters, the connection of many DC units in the same DC distribution line is becoming more common. The proposed ASK modulation has been shown to be successfully used in the DC micro grid systems. The number of converters is unlimited and each is communicated using bits address. For the present setup, it is used to control the duty ratio of the converters. The drawback of the system is the DC decoupling capacitor. It is not allowed to insert large capacitor because it will remove the modulated signal amplitude and hence the signal is distorted. Unidirectional diode is installed in the entry of each converter and its signal data is filtered and converted into control signal.

VIII. Conclusion

An ASK modulation method has been described and its implementation in DC distribution micro-grid system has been described. It can be found that using a low cost microprocessor, the regulation of Buck converters can be successfully regulated without any degradation of the performance. The response time is fast. The method can be used to control as many as converters as we liked because it depend son the address byte. The resolution of the data signal for the duty ratio can also be increase when needed.

Acknowledgement

The authors gratefully acknowledge the financial support of the Research Office of the Hong Kong Polytechnic University for the project (project number G-YD76).

References

[1] Zhang, R.; Lee, F.C.; Boroyevich, D.; Liu, C.; Chen, L.; "AC load conditioner and DC bus conditioner for a DC distribution power system", Power Electronics Specialists Conference, 2000. PESC 00. 2000 IEEE 31st Annual , Volume: 1 , 2000, Page(s): 107 -112 vol.1.

[2] Jinjun Liu; Xiaogang Feng; Lee, F.C.; Borojevich, D.; "Stability margin monitoring for DC distributed power systems via current/voltage perturbation" , Applied Power Electronics Conference and Exposition, 2001. APEC 2001. Sixteenth Annual IEEE , Volume: 2 , 2001, Page(s): 745 -751 vol.2.

[3] K.; Mazumder, S.; Borojevic, D.; Lee, F.C.; "Modeling and control of parallel three-phase PWM boost rectifiers in PEBB-based DC distributed power systems,", Applied Power Electronics Conference and Exposition, 1998. APEC '98. Conference Proceedings 1998., Thirteenth Annual , Volume: 2 , 15-19 Feb 1998, Page(s): 1126 -1132 vol.2.

[4] van Gelder, P.; Ferreira, J.A.; "Zero volt switching hybrid DC circuit breakers", Industry Applications Conference, 2000. Conference Record of the 2000 IEEE , Volume: 5 , 2000, Page(s): 2923 -2927 vol.5.

[5] Xiaogang Feng; Zhihong Ye; Changrong Liu; Zhang, R.; Lee, F.C.; Boroyevich, D.; "Fault detection in DC distributed power systems based on impedance characteristics of modules", IEEE

Industry Applications Conference, 2000. Volume: 4 , Oct 2000, Page(s): 2455 -2462 vol.4.

[6] Thandi, G.S.; Zhang, R.; Xing, K.; Lee, F.C.; Boroyevich, D.; "Modeling, control and stability analysis of a PEBB based DC DPS", Power Delivery, IEEE Transactions on , Volume: 14 Issue: 2 , Apr 1999, Page(s): 497 -505.

[7] Pek, B.C.; Foo, C.F.; "Design of a zero-voltage-transition PWM DC-DC forward converter", Power Electronics and Drive Systems, 1995., Proceedings of 1995 International Conference on , 21-24 Feb 1995 , Page(s): 677 -682 vol.2

[8] K.W.E.Cheng and P.D.Evans, 'The unified theory of extended-period quasi-resonant converter', IEE Proceedings-Electr. Power Appl., Vol. 147, No. 2, March 2000, pp. 127-132.

[9] Anderson, S.W.; Erickson, R.W.; Martin, R.A.; "An improved automotive power distribution system using nonlinear resonant switch converters", Automotive Power Electronics, 1989 , 28-29 Aug 1989, Page(s): 60 -65.

[10] Hua, G.C.; Tabisz, W.A.; Leu, C.S.; Dai, N.; Watson, R.; Lee, F.C.; "Development of a DC distributed power system ", Applied Power Electronics Conference and Exposition, 1994. APEC '94. Conference Proceedings 1994., Ninth Annual , 13-17 Feb 1994, Page(s): 763 -769 vol.2, Page(s): 489 –494

[11] Ciezki, J.G.; Ashton, R.W.;"The application of a customized DSP board for the control of power electronic converters in a DC zonal electric distribution system", Signals, Systems & Computers, 1998. Conference Record of the Thirty-Second Asilomar Conference on, Volume: 2 , 1-4 Nov. 1998, Pages:1017 - 1021 vol.2

[12] Weizhong Tang; Lasseter, R.H.; "An LVDC industrial power distribution system without central control unit", Power Electronics Specialists Conference, 2000. PESC 00. 2000 IEEE 31st Annual , Volume: 2 , 18-23 June 2000, Pages:979 - 984 vol.2.

[13] Lim, C.K.; So, P.L.; Gunawan, E.; Chen, S.; Lie, T.T.; Guan, Y.L.;, "Development of a test bed for high-speed power line communications", Power System Technology, 2000. Proceedings. PowerCon 2000. International Conference on , Volume: 1 , 4-7 Dec. 2000, Pages:451 - 456 vol.1.

[14] Inoue, M.; Higuma, T.; Ito, Y.; Kushiro, N.; Kubota, H.;, "Network architecture for home energy management system", Consumer Electronics, IEEE Transactions on , Volume: 49 , Issue: 3 , Aug. 2003, Pages:606 – 613.

[15] Nakayama, K.; Imai, K.; "A neural demodulator for amplitude shift keying signals", Neural Networks, 1994. IEEE World Congress on Computational Intelligence., 1994 IEEE International Conference on , Volume: 6 , 27 June-2 July 1994, Pages:3909 - 3914 vol.6.

.