Dual Closed Loop Controller of Bus Stepper Motor Based on Back-EMF

Junfeng LIU[1] K.W.E. CHENG[1] S. TO[2]

[1] Department of Electrical Engineering, The Hong Kong Polytechnic University, Hong Kong
E-mail: eejfliu@polyu.edu.hk E-mail: eeecheng@polyu.edu.hk
[2] Department of Industrial & Systems Engineering, The Hong Kong Polytechnic University, Hong Kong
E-mail: mfsto@polyu.edu.hk

Abstract— With the ever-increasing requirement of safety for vehicle, the adaptive headlamp concept is put forward. The cost and maturity level for adaptive headlamp still are the most important matter. In this research, a new senseless dual closed loop stepper motor control algorithm is presented to solve the velocity, torque, cost and position precision issues in adaptive headlamp system, which includes the stall detection and back-EMF measurement for feedback. The position loop with stall detection and compensation based on Back-EMF is presented to avoid step loose caused by disturbance, when the disturbance appear which increases the robust of operation; the current loop with variable parameters Fuzzy logic is proposed to modify the current in coil to cope with the potential load variation. The compensation of load variation makes stepper motor smaller and cheaper. The simulation result shows that dual closed loop algorithm can enhances the system's robustness and application scope of stepper motor.

I. INTRODUCTION

The automobile lamp is the most important safety accessory, especially in night. Many traffic accidents happened for poor lighting environment, in particularly in acute curved road sect, even though it is not the driver's mistake. Intelligent auto-turn headlamp is one of the solutions to reduce the occurrence of hazard. The adaptive headlamp concept is simple: "as a vehicle's steering wheel turns, so do the headlamp", thus, lighting where the driver is looking rather than where the bonnet is projecting. Innovative technology is used in vehicle lighting system, such as electronics, mechatronics, advanced material sciences and others, however, the cost and maturity level for adaptive headlamp still are the most important matter compared to new technology.

The stepper motor, high precision actuator with low cost has a wide application in automobile electronics. The high-performance, low-cost and reduced sizes make them more and more attractive and popular. Among the Variable-Reluctance (VR), Permanent Magnet (PM) and Hybrid stepping motor, the two phase hybrid is the most popular because of the advantage of higher efficiency and torque capability than others. Hybrid stepper motor is generally operated in open loop; however, when disturbance input during motion, the motor may loose steps because there is no feedback on position for correction. The disadvantage of closed-loop operation is mechanical sensor accessories such as encode or distance switch, which add significantly the cost and complexity of motion control system. The senseless closed loop operation is put forward base on back-EMF [1] (electromotive force). In order to improve the accuracy of the position and exclude the noise disturbance, the Kalman Filter has been employed, which increases the algorithm's complexity. The exact linearization of stepper motor's position control is present [2], the state feedback and an input transformation, a fourth order linear system results with Kronecker indexes were complex for implementation and results rely on the accuracy of motor parameter identification. For parametric uncertainties, nonlinear output feedback was present in [3]. Position closed loop control base on fuzzy logic is proposed in [4], which uses optical encoder and fuzzy control to implement single closed loop. The fuzzy logic is suitable for non-linear and fast processes of stepper motor, which can convert the linguistic control strategy based on expert knowledge into the control strategy. The fuzzy control theory combined with PID control is present [5] in a stepping motor position servo system. Optical encode is mandatory for feedback signal, which enlarge the size and increase the cost. The back EMF is too small to measure in senseless control, so as to lose the rotor position, when rotor is in low speed or standstill. The inductance saliency method is present [6], which solve the initial rotor position detection, and is very suitable for hybrid stepper motor, which is highly saturated.

In this research, a new senseless double closed loop stepper motor control algorithm based on (Application Specific Standard product) ASSP driver is presented to solve the velocity, torque, cost and position precision issues in adaptive headlamp system, which includes the stall detection and back-EMF measurement for feedback. The simulation result shows the dual closed loop algorithm can enhances the system's robust and application scope of stepper motor, and resolve the cost and size issue which is critical in AFS (adaptive front-light system) design.

II. ASSP STEPPER MOTOR DRIVER AND CONTROL

With the progress of driver technology, the evolution of driver electronics for stepper motors has converted from the non-intelligent driver to intelligent ASSP driver. In the traditional way, the application of stepper motor typically includes micro-controller, motor driving phase sequences and H-bridge transistor arrangement. The new ASSP driver, especially in automotive application, has become available to drive stepper motor with some interface commands. Such functionality as on chip current regulation, a translation table between exact rotor position and corresponding coil currents, a position controlling, speed and acceleration, and the physical layer and data-link protocol of a communication bus are integrated into single ASSP driver transistors. The ASSP bring out the convenience to focus on the motor control algorithm and let driver to take care of the rest, such as the acceleration and deceleration of speed, which is the prerequisites to avoid stall and overshoot, almost always

Digital Reference: K210509044

rely on engineer's experiment and experience. The ASSP driver series are mainly used for dedicated mechatronics applications, such as robotics and automotive systems.

In this research, the motor driver IC(AMIS-3062x), which is a family of integrated micro-stepping stepper motor ASSP driver chip, receives positioning, current and max/min velocity etc. from controller, feedback the actual position, back-EMF and stall flag etc.. The actuator abides by the instruction from micro-controller through ASSP driver. The dual closed loop control algorithm is introduced into stepper motor.

III. DUAL CLOSED LOOP ALGORITHM

The dual closed loop has a broad application in electric AC/DC drives, which include position loop and current loop. Figure 1 is the structure of dual closed loop controller of stepper motor. The compensation of position closed loop is used to avoid step loose when back-EMF detect the stall phenomenon; and fuzzy logic control loop is used to analysis current and back-EMF feedback, and then generates the current as controller output, which makes stepper motor working with intense fluctuation of load, enlarge stepper motor application and speed up the response time of system. The tightly combination of position loop and current loop can effectively improve the synthetic performance of controller.

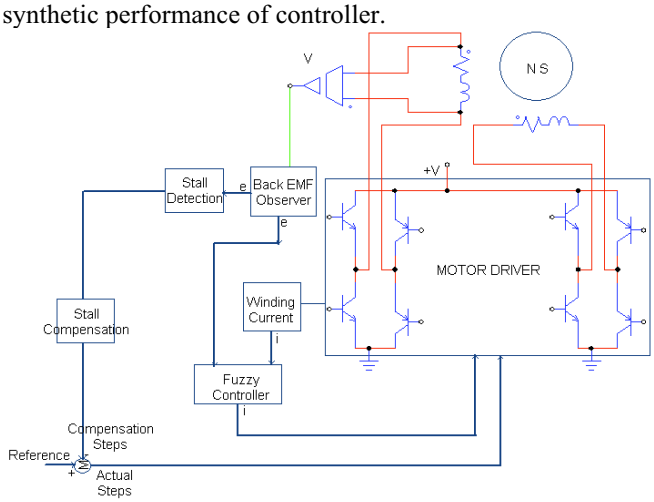

Fig.1 Structure of Controller

Every motor is based on the principle that a current in a conductor in the presence of a magnetic field creates a force. This causes this conductor to move. The basic formula of mechanism and voltage balance of hybrid stepper motor is as below:

$$T_e - T_l = J\frac{d^2\theta}{dt^2} \quad (1)$$

$$\frac{d\Psi_k}{dt} + i_k R = U_k \quad (2)$$

Where

T_e means the torque of electromagnetic (N.m);

T_l means load torque (N.m);

J means Moment of inertia;

Ψ_k means flux of phase k;

i_k is the current of phase k;

R is the resistor of stator;

U_k is the voltage of phase

Meanwhile, a moving conductor in a magnetic field creates an electromagnetic force in the opposite direction given by

$$e = -\frac{d\Psi}{dt}$$

(3)

Where, Ψ is the magnetic flux of the field. If the motion is circular with an angular speed w, this so called Back EMF is given by:

$$e = E_m \cos wt\,, \quad (4)$$

Where

$$E_m = -Nw\Phi_m\,; \quad (5)$$

The Back EMF is zero or approach zero when the rotor is in standstill or low speed, which means back-EMF is not enough to calculate the rotor position without further process, such as EKF. However, the measurement of back-EMF is useful for position closed loop compensation and motion stall detection with ASSP driver.

A. Motion Stall Detection

When motor is mechanically blocked or is accelerated into a physical end-stop, the step loss will occur. Motor stop or begin to resonance, the controller still think it should be at set position, which will result in critical issue and accumulation of error, especially in automobile or any other high precision occasions. If it can not be rectified on time, the succeeding control is meaningless until the controller detects it and reset to initial value. For controller, the earlier detect; the better. In this research, the controller not only should detect the stall, but the compensation should put into practice on time.

From the equation 4 and 5, the back-EMF is nonlinear with rotor speed, which is an approximate cosines relation with variable amplitude, as indicated in fig 2. From the waveform of back-EMF, the three stall scenarios can be defined [7]:

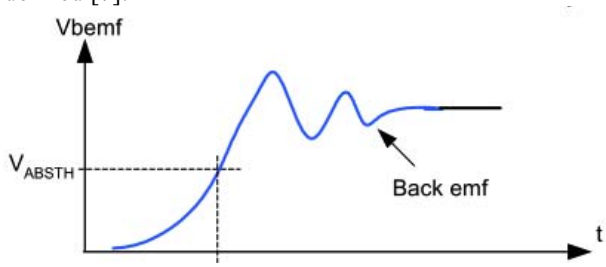

Fig. 2a Back-EMF [7]

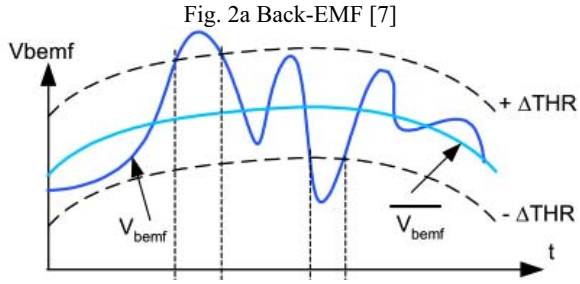

Fig. 2b Stall Detection [7]

1 The motor is accelerated by a pulling or propelling force and the resulting back-EMF is above the delta high threshold;

2 The motor is slow down and the resulting back-EMF is below the delta low threshold.

3 The motor is block and the velocity is zero or almost zero, resulting back-EMF is below the absolute threshold.

For given application, the maximum and minimum

value of velocity and acceleration are chose to surpass the resonance region of stepper motor, which determine the back-EMF signal amplitude range and frequency range as well. To avoid the stall negligence by controller, the controller set the thresholds of back-EMF in driver. Once driver check the threshold is exceeded from up or down side, driver directly interrupts normal operation to inform the controller. Controller is ruler-maker and decision-maker, which set check condition, receives stall flag from the driver, compensate the loss of step and sends out instruction to reset the position. The check and compensation both are important to set up a digital position closed loop controller.

B. Position Closed Loop

In this research, the position closed loop is not the complete closed loop; instead, it is a half closed loop, which compensates deviation when stall is detected. Otherwise, the controller continues to move actuator from old position to new position, instead of interrupt the normal procedures. The controller determines step loss compensation through back-EMF stall detection. The decision of either resumes the position measurement and compensates or reset to fail-safe position is made by controller.

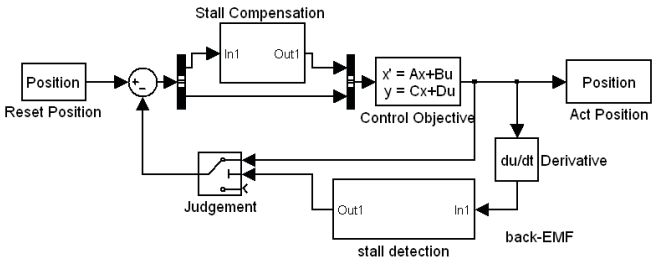

Fig. 3 Position Closed Loop

As Fig.3 indicates, the Back-EMF is used to detect motion stall, and the rotor actual position is feed back by command between controller and driver when the speed is in the range of threshold. Once the step loss has been detected, the compensation begins to work. The different stall occur, the different compensation measures should be employed.

The compensation method for step losses:

1. For scenario1, controller calculates the steps with the maximum velocity and lookup the table, which index with back-EMF as well as refer to the motion trajectory, to append the compensation.
2. For scenario2, controller calculates the steps with the minimum velocity and lookup the table, which index with back-EMF as well as refer to the motion trajectory, to reduce the compensation.
3. For scenario3, the remaining steps should be check before compensation. If it is end of motion, compensation is unnecessary. If it is not, the compensation measures should go back fail-safe position, which is often the initial point or middle point of motion to ensure no severe accident happen for step losses.

For design of lookup table, it is determined by velocity (motion trajectory), acceleration and resonance frequency.

The resonance is the main cause of stall, and the velocity and acceleration are set to surpass the resonance area. The calculation formula of resonance frequency is [9]:

$$f\,res = \frac{1}{2\pi}\sqrt{\frac{ZT_{\max}}{J}} \tag{6}$$

Where *fres* is resonant frequency of the motor

J is moment of inertia

Z is the number of rotor tooth

$T_{\max}$ is the max torque

The equation (6) indicates the resonant frequency is changed along with the working conditions, especially the load. The frequency increases with the maximum load. After the area of load is determined, the frequency should be in a small range. According to resonance frequency, the max/min velocity and acceleration are selected too. The step losses compensation formula is

$$LCV = T_p \frac{V}{V\max - V\min} + T_i \frac{(V\max^2 - V\min^2)}{2Acc} \tag{7}$$

LCV is loss compensation value

V is the current velocity

Vmax/Vmin is max/min velocity

Acc is the measured acceleration

Tp and Ti are the parameters of adjustment

The step loose always happen out of expectance, the compensation in controller algorithm always work with different modes, which reduce the possibility of loss and accumulation of error, especially the work load abruptly changed in a stable state. The open loop controller is difficult to trace with mutative load and environment, such as high demanding and high precision automotive or robotic scenario.

C. Fuzzy Closed Loop with Variable Parameters

The fuzzy controller is the algorithm, which converts the linguistic control, based on expert knowledge into an automatic control strategy. Therefore, the fuzzy logic algorithm is much closer to human thinking than others.

The load change can reflect on the torque-angle and load-angle characteristic of hybrid stepper motor. The torque of electromagnetism is composed of the synchronous torque

$$T_{e1} = f(i, \theta_e) \tag{8}$$

And reluctance torque

$$T_{e2} = f(i, \frac{d\theta_e}{dt}) \tag{9}$$

Where, θ_e is the torque-angle. T_{e2} should decrease along with load increases. When rotor stops, the reluctance torque is zero. T_{e1} is the function of winding current and torque-angle. The compensation of current can directly increase the electromagnetism torque and enhance the application scope of motor. Furthermore, as fig.4 indicates, the back-EMF is the nonlinear function of motion velocity. The phase between voltage and the current in the coil is decided by the mechanical load, the phase difference should increased along with the load increase. The characteristic of phase, which reflects the load, is load-angle character of stepper motor.

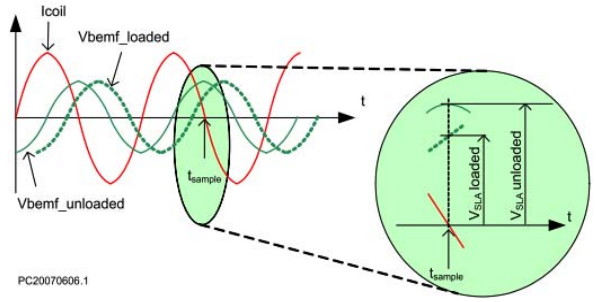

Fig. 4 Relationship of load and back-EMF [7]

When sampling, the phase difference can effectively reflect the load changes. At this moment, the no-load back-EMF should be the maximum value, and load back-EMF is different with load changes. Although there are three feedback parameters from driver, the coil current determine the sample time of back-EMF, the back-EMF and change rate of back-EMF are used for fuzzy inference compared with the max value of unload situation. The output of fuzzy logic is the increments or decrements of coil current to compensate the changes of load, which have been proved from torque-angle characteristics. In order to adapt various applications, the self tunings scale parameter can be used to extend the area of fuzzy logic controller.

The error signal between the setting value of back-EMF and the measured value, and change of error are define as below:

$$e(k) = E_{set}(k) - E_{act}(k) \quad , \quad e'(k) = e(k) - e(k-1) \qquad (10)$$

Where, E is back-EMF. The below fig.5 is the topology structure of proposed fuzzy controller.

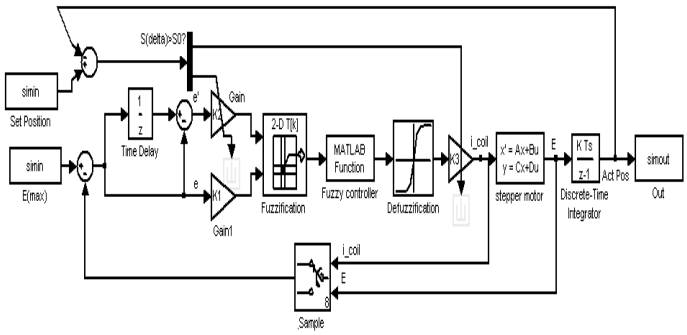

Fig. 5 Fuzzy Current Closed Loop

The three operation block of fuzzy controller:

1. Fuzzification
   The numerical value is expressed by linguistic value, and scale factor for k1 (e) and k2 (e') is set according to the scope of fuzzy quantification. Seven linguistic sets are employed with triangular Membership function.
2. Fuzzy inference
   The fuzzy logic rule is draw up to form a decision table. The table index include the linguistic value of e and e', which is a nonlinear relationship between input and output, and aim is to get a good control with expert knowledge.
3. Defuzzication
   The fuzzy controller output convert linguistic value to numerical values and scaled, which determine the control output with method of central gravity.
   The control toque is decided by coil current, and directly by K3. When the rotor position is closed to setting position, the nonlinear friction force is overcome by control torque, the left torque is used to control motion, and nonlinear torque is exponential decay. In this phase, the torque should adapt to motion curve, if it is too great, the vibration and overshoot affect the dynamic performance; meanwhile, if it is too small, the static performance should be influenced. K3 should be changed to choose the best quantitative factor. After the K3 is selected to keep stable, and then enlarge the K2 to increase input resolution. When the rotor position is far from the setting position, the friction torque is the constant and the control torque can increase along with the increase of K3. In this phase, the K3 can be larger than the former. The phased fuzzy controller effectively solved the dynamic and static performance of fuzzy controller.

In this research, the mathematical model of object is unnecessary for fuzzy controller, and the fuzzy controller is insensitive for the changes of control object. Especially, the strongly nonlinearity of stepper motor and mechanical gaps of real system, both of them determine the fuzzy controller is good solution than others.

IV. DESIGN IMPLEMENTATION

For the application of automotive and work in local electrical network, the LIN bus network can be used for driver instruction communication, and operating voltages is fully compatible with the automotive system. LIN has a universal industrial application with one master control unit and one or more slave nodes, the sender and receiver is indentified by "Head", which include the address information of slave node. Only one slave can respond to master request.

The test bed is composed of:

-the stepper motor (Haydon Linear Motor 2300 series)

-the driver (AMIS30623)

-the controller (ATMEL AT90CAN32)

The message flow between controller and driver is:

1 The command GetFullstatus is sent out from controller to request operation information of motor;

2 And then Irun (operating current in the coil) and ActPos (Actual Position) is feedback from driver; the back-EMF collects from SLA pin of driver;

3 After the controller algorithm handling, command SetMotorParam (Irun) and SetPosition (SetPos) are sent to driver with the current and position control signal.

For Fuzzy algorithm implementation, the lookup table is built up and stored on ROM of controller, which simplify the fuzzy inference of real time. The microprocessor resource is reserved to expedite sample handling and communication between controller and driver timely.

V. SIMULATION RESULTS

The simulation of Dual closed loop hybrid stepper motor controller is build up with SIMULINK. And the stepper motor used for the simulation verifications was a 40 V, 2A, 1.8 degrade, two-phase hybrid stepping motor. The motor parameters are:

Winding Resistance 0.7 Ω

Winding Inductance 1.4e-3H

Stator pole number 40

Maximum Flux Linkage 0.005Vs

Maximum Detent Torque 0.002N.m

Total inertia 1.2e-7kg.m^2.

Fig.6a and b illustrate the closed loop response with reference position. In Fig.6a, there is no disturbance in

ascend period till enter in stabilizations, and disturbance enters at 0.07 in steady state. The estimated speed matched actual speed quite well as expected without disturbance, however, the load disturbance exceeds the range of open loop adjustment, the resonance and vibration might be happen. Until the simulation finish, the system still can not be steady in Fig.6a. In Fig.6b, the disturbance enters at 0.06 in steady state. Comparing Theda (Position), the double closed loop algorithm shows the better robustness characteristics, whose torque (Te) increase along with the load increase, and obtain the new steady point. From the equation 6 and 7, the Te increases along with the coil current increase, the dual closed loop controller effectively compensates the load influence.

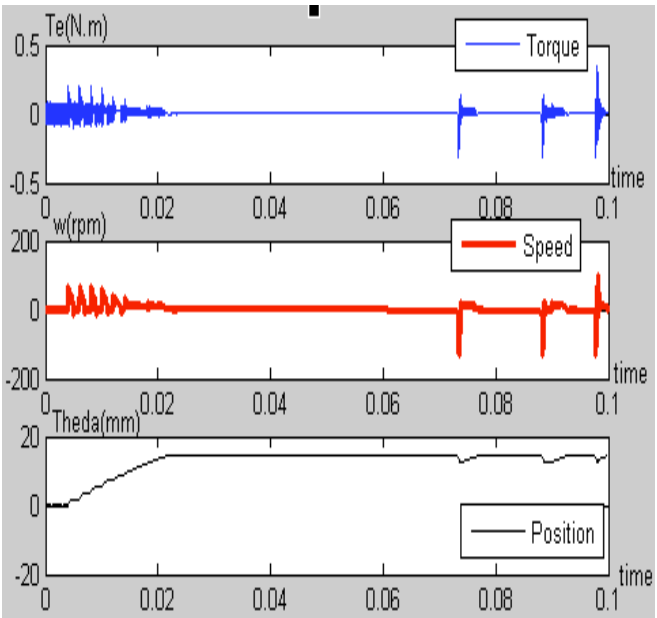

Fig. 6a Disturbance Suppression of Open Loop Algorithm

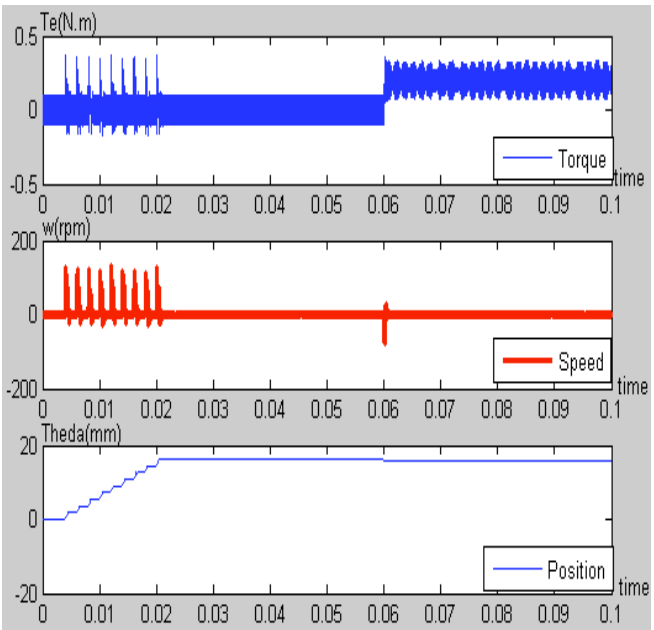

Fig. 6b Disturbance Suppression of Double Closed Loop

VI. CONCLUTION

The dual closed loop algorithm can compensate the current when the load augment, which resist the influent from the disturbance; in the meantime, it compensate the step loss, so as to the controller algorithm is consistent with the actual position.

To sum up, the proposed double closed loop algorithm decrease the additional circuit, and has higher performance than conventional open loop. Along with the ASSP is wildly applied, the new algorithm can be applied to many different industry application without additional calibration. The simulation result in SIMULINK has fully exerted the advantage of new algorithm.

VII. FUTURE WORK

As the car approaches a bend in the road, the outer lamps could start to swivel in the appropriate direction even before the driver has started to react. At high speeds, the lamps follow the angle of the steering wheel almost instantaneously, while at lower speeds, the swiveling mechanism operates more slowly. These adaptive ability are more intelligent and better satisfy the safety requirement.

ACKNOWLEDGMENT

This work was supported by the Hong Kong Polytechnic University Research office under the project code **G-YG76.**

REFERENCE

[1] S. A. Schweid, R. M. Lofthus, J. E. McInroy, and Y. Ota, "Hybrid step motor position estimation from back EMF," in Control Applications, 1995., Proceedings of the 4th IEEE Conference on, 1995, pp. 774-778.

[2] M. Zribi and J. Chiasson, "Position control of a PM stepper motor by exact linearization," Automatic Control, IEEE Transactions on, vol. 36, pp. 620-625, 1991.

[3] H. Melkote and F. Khorrami, "Nonlinear output feedback control for stepper motors: a robust adaptive approach," in Control Applications, 1999. Proceedings of the 1999 IEEE International Conference on, 1999, pp. 755-760 vol. 1.

[4] F. Betin, D. Pinchon, and A. Jaafari, "Robust speed control of a stepping motor drive using fuzzy logic," in Control Applications, 1998. Proceedings of the 1998 IEEE International Conference on, 1998, pp. 948-952 vol.2.

[5] J. Shi, D. Xu, and Z. Wang, "Hybrid stepping motor fuzzy position servo system based on DSP," in Industrial Electronics Society, 2000. IECON 2000. 26th Annual Confjerence of the IEEE, 2000, pp. 1475-1479 vol.2.

[6] M. Bendjedia, Y. Ait-Amirat, and B. Walther, A. Berthon, " DSP implementation of rotor position detection method for hybrid stepper motor," in Power Electronics and Motion Control Conference, 2006. IPEMC'06. CES/IEEE 5th International Volume 3, 14-16 Aug.2006 Page(s)1-5.

[7] "Datesheet of AMIS30623,"Available: http://www.amis.com

[8] G. Remmerie, P.Cox, " Highly integrated controller/Driver for industrial motion control of stepper motors," in AMI Semiconductor Application Notes.

[9] "Application Note of AMIS3062x,"Available: http://www.amis.com